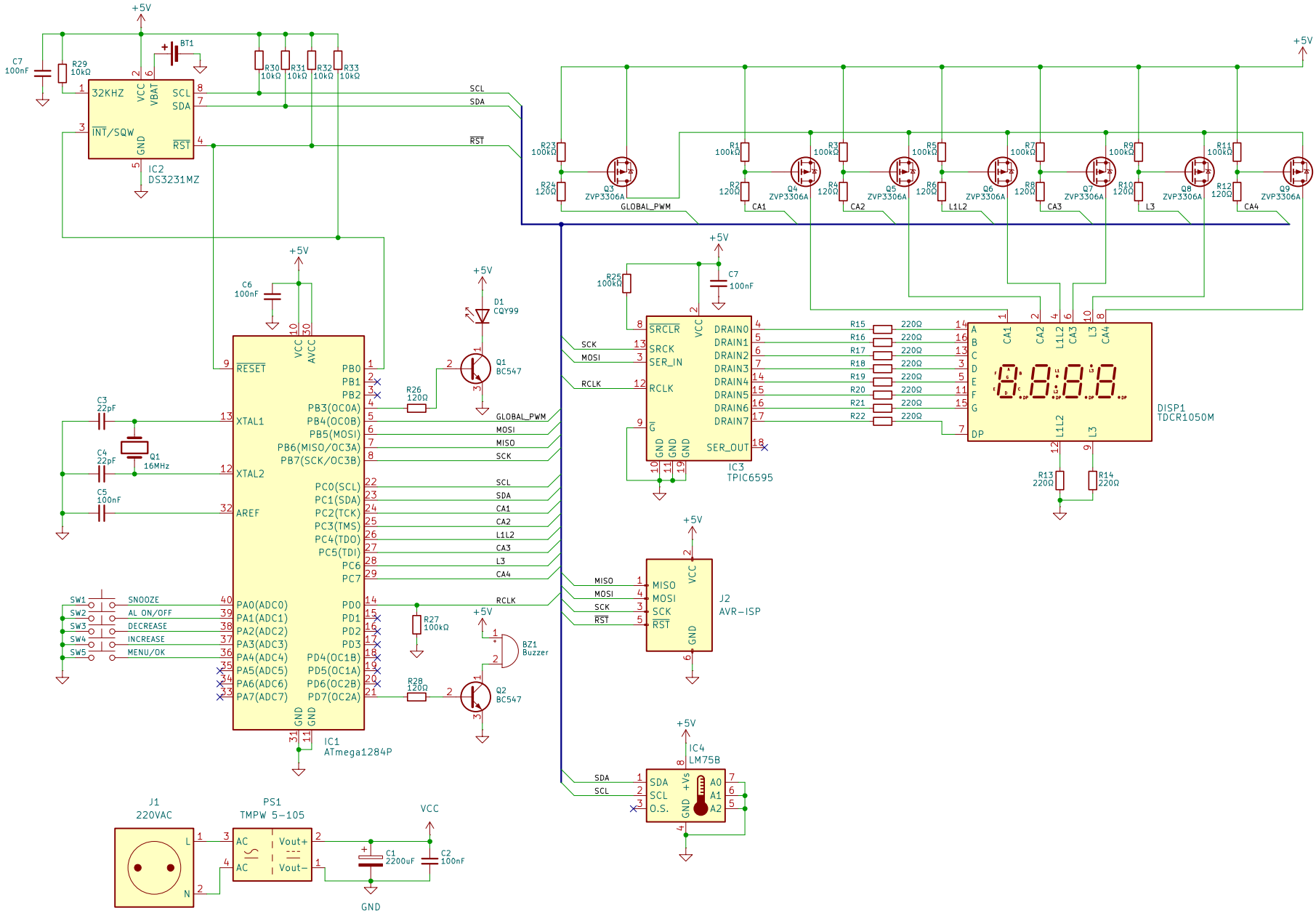
+5V
C7
100nF
R29
10kΩ
BT1
32KHZ
VCC
VBAT
SCL
SDA
INT/SQW
GND
RST
IC2
DS3231MZ
R30
10kΩ
R31
10kΩ
R32
10kΩ
R33
10kΩ
SCL
SDA
RST
R23
100kΩ
R24
120Ω
Q3
ZVP3306A
GLOBAL_PWM
R1
100kΩ
R2
120Ω
CA1
Q4
ZVP3306A
R3
100kΩ
R4
120Ω
CA2
Q5
ZVP3306A
R5
100kΩ
R6
120Ω
L1L2
Q6
ZVP3306A
R7
100kΩ
R8
120Ω
CA3
Q7
ZVP3306A
R9
100kΩ
R10
120Ω
L3
Q8
ZVP3306A
R11
100kΩ
R12
120Ω
CA4
Q9
ZVP3306A
C6
100nF
VCC
AVCC
RESET
XTAL1
XTAL2
AREF
C3
22pF
C4
22pF
Q1
16MHz
C5
100nF
PB0
PB1
PB2
PB3(OC0A)
PB4(OC0B)
PB5(MOSI)
PB6(MISO/OC3A)
PB7(SCK/OC3B)
PC0(SCL)
PC1(SDA)
PC2(TCK)
PC3(TMS)
PC4(TDO)
PC5(TDI)
PC6
PC7
PD0
PD1
PD2
PD3
PD4(OC1B)
PD5(OC1A)
PD6(OC2B)
PD7(OC2A)
PA0(ADC0)
PA1(ADC1)
PA2(ADC2)
PA3(ADC3)
PA4(ADC4)
PA5(ADC5)
PA6(ADC6)
PA7(ADC7)
GND
IC1
ATmega1284P
SW1
SW2
SW3
SW4
SW5
SNOOZE
AL ON/OFF
DECREASE
INCREASE
MENU/OK
R26
120Ω
D1
CQY99
Q1
BC547
GLOBAL_PWM
MOSI
MISO
SCK
SCL
SDA
CA1
CA2
L1L2
CA3
L3
CA4
RCLK
R27
100kΩ
BZ1
Buzzer
R28
120Ω
Q2
BC547
R25
100kΩ
C7
100nF
SRCLR
SRCK
SER_IN
RCLK
G
DRAIN0
DRAIN1
DRAIN2
DRAIN3
DRAIN4
DRAIN5
DRAIN6
DRAIN7
SER_OUT
IC3
TPIC6595
R15
R16
R17
R18
R19
R20
R21
R22
220Ω
A
B
C
D
E
F
G
DP
DISP1
TDCR1050M
R13
220Ω
R14
220Ω
MISO
MOSI
SCK
RST
J2
AVR-ISP
IC4
LM75B
SDA
SCL
O.S.
+Vs
A0
A1
A2
J1
220VAC
L
N
PS1
TMPW 5-105
AC
Vout+
Vout−
C1
2200uF
C2
100nF
VCC
GND