Electrak® Actuators and Controls

Trouble-free, reliable linear motion control.

Design leadership . . .

Warner Linear pioneered the development of ball bearing screw actuators for NC machine tools and jet aircraft landing gears, wing flap control, wing sweeps, thrust reversers . . . all the way to the docking platform and manipulator arm on the space shuttle.

The first generation of general purpose actuators were developed for remote, pushbutton control of accessory drives on garden tractors and automated farm equipment.

The industrial actuators presented in this catalog represent proven design concepts that you'll find in all the Electrak series . . . from the light load, mini-actuator to the high performance Electrak 205, capable of handling loads up to 1500* pounds with up to 10 times more life than any previously available actuator.

Electrak . . . rugged, reliable, remote linear motion control with the push of a button.

* Contact the factory for applications with loads exceeding 1000 pounds.

© 2000 Warner Electric, Inc.

Contents

Features and Benefits 2-5

Applications 6-7

Selection 8-9

Electrak Specifications

Electrak 050 10-11

Electrak 150 12-13

Electrak 1 14-15

Electrak 1 Long Life 16-17

Electrak 2 18-19

Electrak 5 20-21

Electrak 10 22-23

Electrak 100 24-25

Electrak 205 26-27

Actuator Control Specifications

Selection 28

Remote Switch 29

DE14 and DF14 series 30

MCS-2005/MCS-2006 31

MCS-2007/MCS-2008 31

MCS-2015 32

MCS-2025 32

MCS-2035 33

MCS-2041/MCS-2042 34

MCS-2051/MCS-2052 34

Control Dimensions 35-36

Design Considerations 37-38

Technical Data 39-40

Application Data Form 41

Features and Benefits

Electrak design styles

Electrak actuators are available in load ranges from 25 to 1500 pounds, stroke lengths from 2 to 24 inches and operating voltages of 12 and 24 VDC and 115 and 230 VAC. Individual models offer additional features to meet a variety of design needs.

Electrak E050 series

The Electrak 050 is the new quiet, low cost DC actuator that can push or pull up to 112 lb. Available in 12 or 24 VDC models with built in limit switches and stroke lengths to 8 inches. A control with hand held pendant is available for 115 VAC applications.

Electrak E150 series

The Electrak 150 actuator is a lightweight, low cost actuator with a load rating up to 450 lb. Available in 12, 24, or 36 VDC models and a control with pendant is available for 115 VAC operation. Stroke lengths to 16 inches and optional adjustable end of stroke limit switches or feedback potentiometer. Note: Max stroke for pot unit is 14".

Electrak series

The rest of the Electrak family includes compact models with load ranges beginning at 25 pounds up to heavy duty actuators with load capability up to 1500* pounds. There are AC and DC models and also controls to enable the 24 VDC actuators to operate on 115 VAC.

Dependable operation

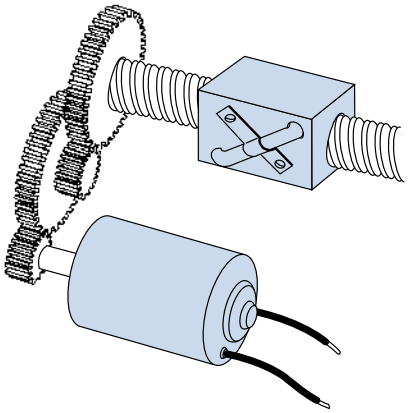

Easy wiring

Control leads are safely and easily wired. See specific model descriptions for details.

Compact design

An Electrak actuator with a four inch stroke length can produce 1500* pounds of force from a 12" package. Electrak 1 series actuators fit small areas with package lengths as short as six inches.

Maintenance-free

Since all adjustments and lubrication are made during assembly, no maintenance is required or recommended. Consistent, repeatable performance is provided for the entire lifetime of the actuator.

Bidirectional

Electrak actuators can push and pull loads ranging from one pound to 3/4* of a ton, and can extend up to twenty-four inches. With MCS-2000 series controls, you can create the actuator control system to meet your particular motion control requirements.

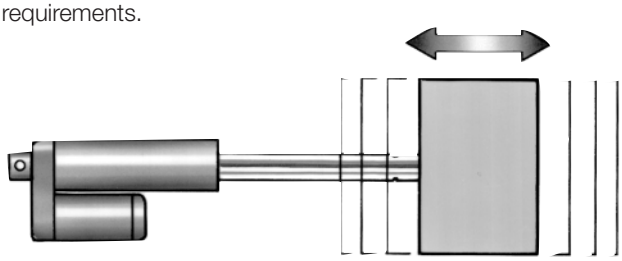

Efficient operation

Warner linear actuators are comprised of a combination electric motor, gear train and drive screw. The direct conversion of electric to mechanical energy results in effective, economical linear motion. Completely self-contained and sealed Electrak actuators require minimal installation hardware and wiring, and eliminate the need for periodic maintenance and adjustment.

Superb holding power

Electrak actuators operate equally well under tension or compression loads. They will hold a load indefinitely without power, and can be directly interfaced to a programmable controller or other electronic control device.

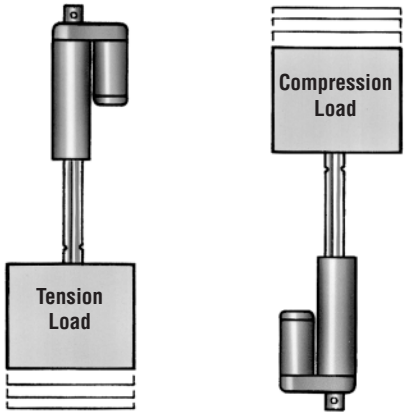

* Contact the factory for applications with loads exceeding 1000 pounds.

Rugged and reliable

Electrak actuators incorporate strong, high quality components to assure trouble-free service. Rugged spur gearing, aircraft quality lubricants and high performance motors provide the maximum life and value for the user. Gasketed and sealed throughout for maximum protection. Stainless steel or aluminum extension tubes prevent corrosion. Cover tube stiffeners increase load support. Thermal overload switch protects motors.

Energy efficient

Electric control offers clean, smooth linear motion without fluids, plumbing or other expensive components. Electrak actuators require power only when in motion and no power when stationary.

Lead screw drive system

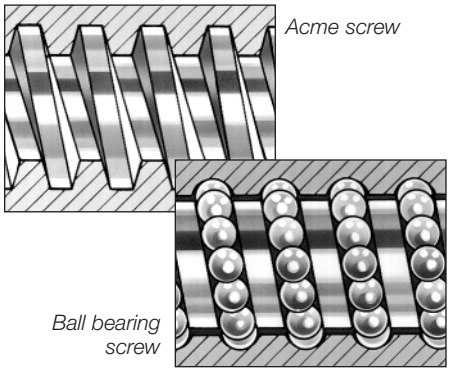

Electrak 1, 2, 050 and 150 models feature acme screws which will not backdrive when the power is off. Electrak 5, 10, 100 and 205 series actuators are equipped with highly efficient and accurate Warner Linear ball bearing screws. A load holding brake keeps the load in position when power is off.

* Contact the factory for applications with loads exceeding 1000 pounds.

Versatile

Motors used on Warner linear actuators utilize thermal switches in their windings to shut the actuator off in case of overheating. Reset is automatic after the motor has cooled. A standard overload clutch automatically ratchets if the load is too great or at the end of a stroke. Again, reset is automatic upon load reduction or direction reversal. With their compact size, Warner linear actuators can be located in confined areas, yet will move loads from 25 to 1500* pounds. Linear actuators will hold their loads with no power draw. Stroke lengths of 1 to 24 inches are available and speeds are as high as two inches per second. Weatherproofing makes these actuators ideal for use on outdoor equipment. Actuators are easy to apply and easy to install and offer advantages over mechanical and hydraulic systems in many linear motion applications. They are self-contained, rugged, and durable, making them ideal for almost any lift, push, or pull application.

Easy Installation

Actuators are quickly and easily mounted by several methods.

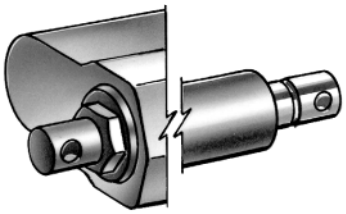

- **Clevis pin**

Two parallel clevis pins provide easy installation for Electrak model 1, 2, 5, 10, 050 and 150 actuators to a fixed

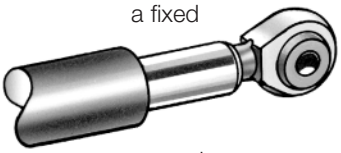

member.

- **Swivel rod end**

This mounting provides greater freedom for attaching the load. It is standard on the Electrak 100 and 205 models and attaches to the extension tube.

- **Adjustable mounting bracket**

The Electrak 100 is mounted by a crosshole on the extension tube and a bracket that can be easily positioned where needed on the cover tube.

Housing gaskets and seals

Completely gasketed housing and motor safely seals wires and internal components from dirt, dust and water, making most Electrak actuators equally suited for outdoor as well as in-plant applications.

Low cost, trouble free, electric control

Electric actuation for fast, responsive, remote control without complex, troublesome and expensive hydraulic or pneumatic components.

Controls are available to allow all of the 24 VDC actuators to operate on 115 VAC. The Electrak 050 and 150 have controls with hand held pendants for operating the actuators. The Electrak 1, 2, 5, 10, 100 and 205 have controls ranging from power supplies to enclosures with membrane switches for actuator operation and a feedback display on the cover to illustrate position of the actuator.

Features and Benefits

Electrak E050 series

The Electrak E050 actuator is the new compact, quiet, low priced actuator suitable for a variety of markets and applications. This feature packed actuator has a very short retracted length for applications where space is a premium:

- It is designed to be quiet for medical or office applications.
- It has built in limit switches for end of stroke protection and a clutch for mid stroke protection.
- The colors are molded into the plastic to both eliminate the need for paint and touchup of scratches.
- The actuator has a breather tube in the wiring harness to allow the actuator to operate without drawing water through the seals on the cover tube.
- It is available with a control and pendant for one or two actuators.

The entire actuator has been designed for ease of installation, light weight, quiet operation, no maintenance and low cost.

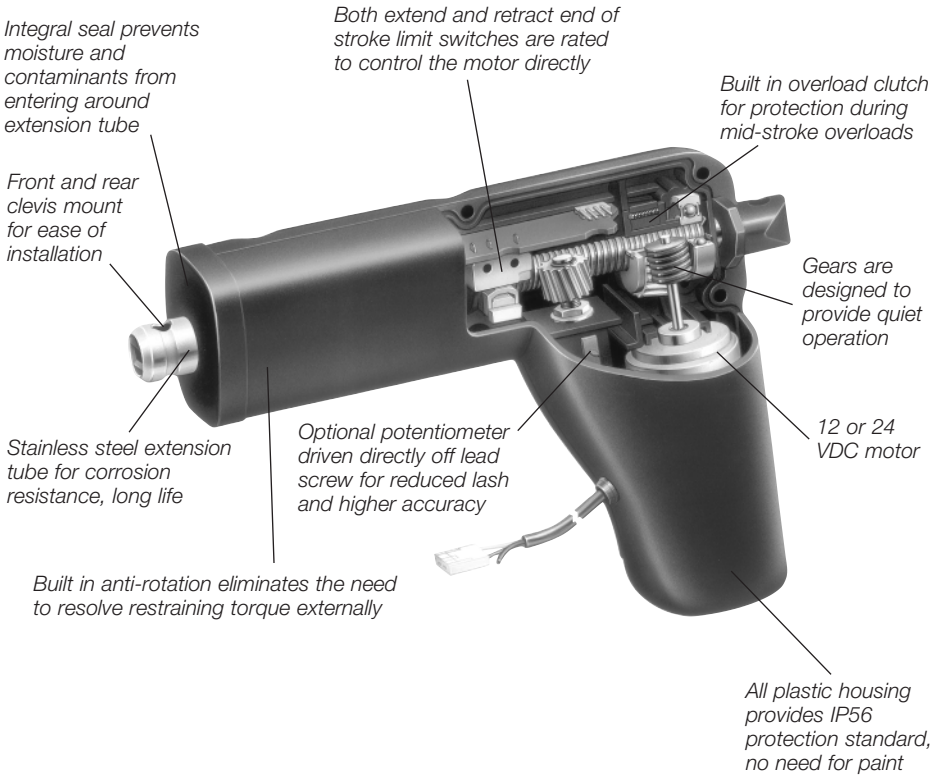

Electrak E150 series

The Electrak 150 is the first of a new series of low priced, quiet actuators with different load and speed ranges.

Take time to look through the cutaway drawing to see what makes this actuator different. The optional limit switches are designed to operate with fewer parts. The plastic cover is designed to be recyclable. The actuator has a breather tube in the wiring harness to allow the actuator to operate without drawing water through the seals on the cover tube. The colors are molded into the plastic to both eliminate the need for paint and touchup of scratches. The anodized aluminum cover tube is corrosion resistant and also hides scratches. The extension tube is stainless steel and the front and rear adapters are zinc die castings for corrosion resistance. All of the thrust is resolved through the screw with the plastic housing providing environmental protection but carrying no load. The entire actuator has been created for ease of installation, quiet operation, no maintenance, light weight, and low cost.

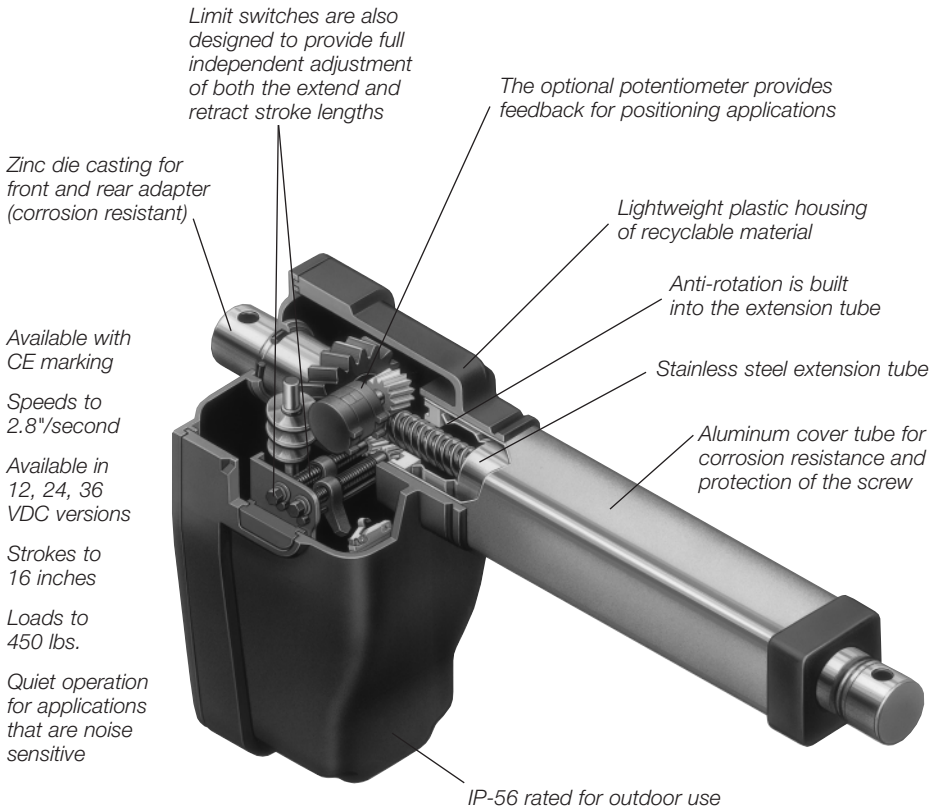

An inside look at the Electrak 205 . . .

This top of the line actuator features a ball bearing lead screw for maximum reliability, accuracy and long life. It has an operating load capacity of 500, 1000 or 1500* pounds. See the Selection Guide and specification pages for features and performance characteristics of the entire line of Electrak models.

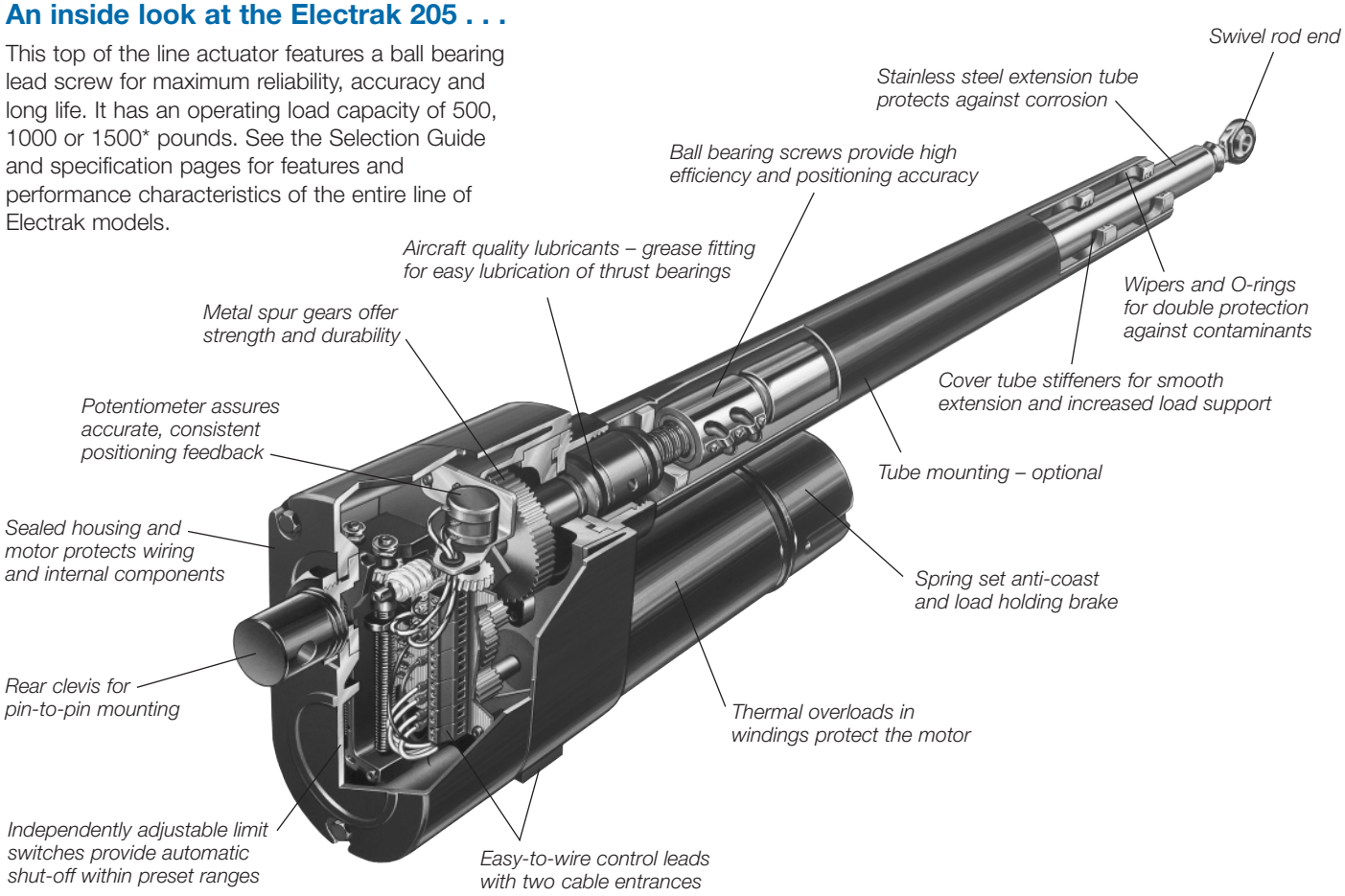

The Electrak family of linear actuators . . .

1

Mini-actuator with feedback for accurate positioning. Mini-actuator with long life limit switches.

2

Economical, general purpose, medium duty DC actuator.

5

General purpose heavy duty AC actuator.

10

General purpose industrial DC actuator.

100

Heavy duty, positional feedback DC actuator for most industrial applications

205

High load, long life, rugged design industrial actuator with load holding brake and positioning feedback.

Control features

Warner Linear offers a choice in actuator controls.

Whether you plan to operate from a simple pushbutton or a programmable controller, the MCS-2000 series controls make your system design easy to install and simple to operate. They are housed in rugged NEMA 1 enclosures, and feature dynamic braking (DC actuators only), emergency stop/off pushbutton, power on indicator, and percent of stroke meter (for feedback actuators only) for precise position feedback. Multiple step positioning is available for easy integration with programmable controller systems and integral limit switches for automatic control of extend-retract cycles. All MCS-2000 series controls are PC compatible and feature easy-to-use terminal strips for input and output wiring.

* Contact the factory for applications with loads exceeding 1000 pounds.

Applications

The variety of load ranges, sizes, and voltages of the Electrak actuators provides for a wide range of applications from boats to sweepers to van to exercise equipment to diverting products on conveyor lines.

Some of the advantages of electric actuators are:

- Compact and self contained, no hoses, filters, accumulators, dryers
- Maintenance free operation
- Adjustable strokes on some models for changing applications
- Environmentally friendly, no hydraulic leaks
- Easy to install, usually just 2 wires to operate
- New E050 quiet enough for office environments
- Some models with feedback for positioning control
- Holds load with power removed
- All DC models suitable for washdown applications

Floor Sweeper/Scrubber

Electrak actuators apply the downforce on the squeegee to pick up the water during cleaning.

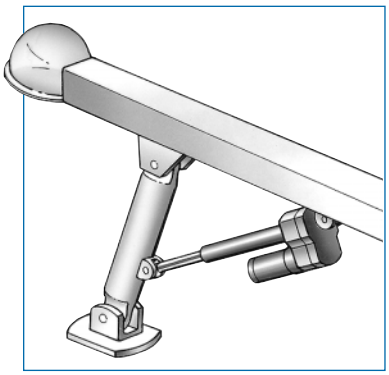

Towing hitch

An actuator attached to a tow bar provides effortless raising and lowering of even the heaviest load for quick alignment and hitching.

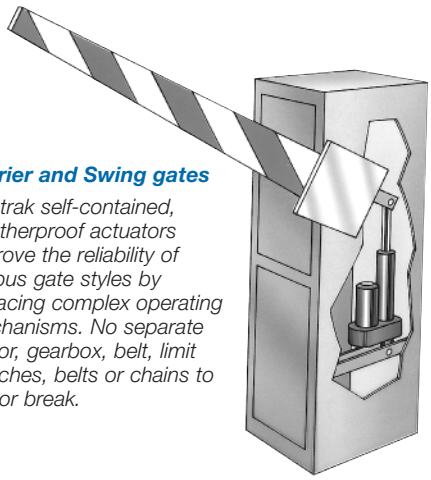

Barrier and Swing gates

Electrak self-contained, weatherproof actuators improve the reliability of various gate styles by replacing complex operating mechanisms. No separate motor, gearbox, belt, limit switches, belts or chains to slip or break.

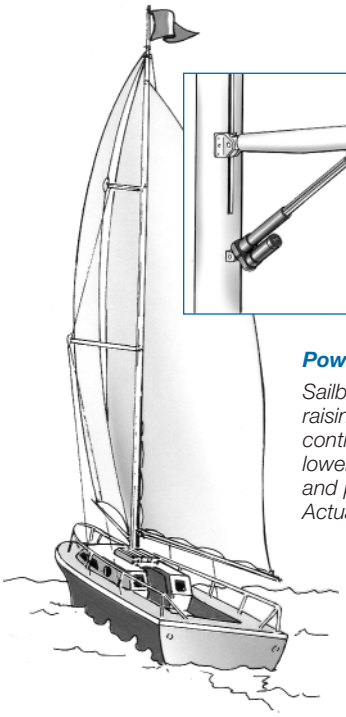

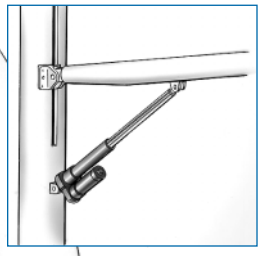

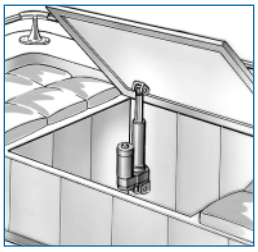

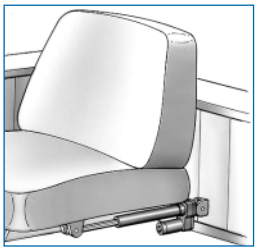

Power boats and sailing crafts

Sailboat applications include boom control when raising or lowering the mainsail and downhaul control. Actuators are useful for raising and lowering hatch covers and operating windows and positioning seats all with push-button ease. Actuators are available with CE listing.

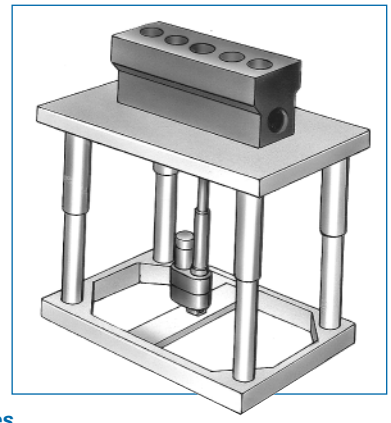

Lift tables

Electrak actuators work just as well on elevator platform or scissor lift tables. The materials can be raised and lowered to reach any required height and the load is held in position even when the power is off.

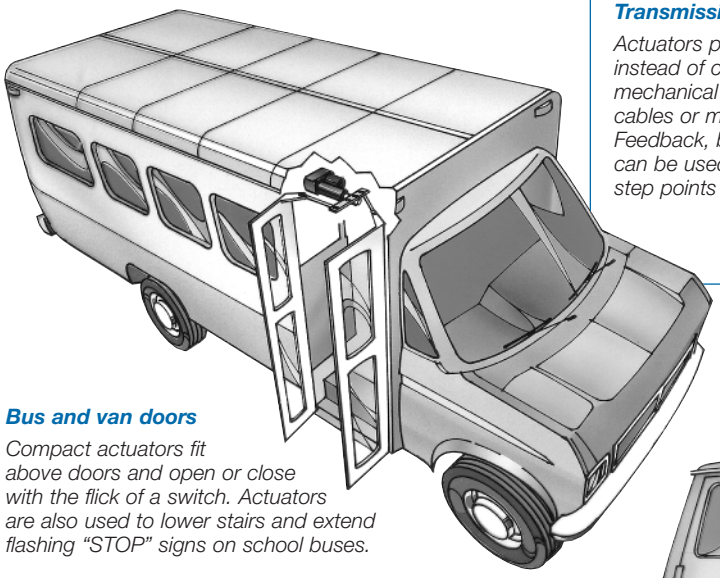

Transmission shift

Actuators provide "shift by wire" instead of cumbersome mechanical linkages, binding cables or messy hydraulics. Feedback, built into the actuator, can be used to make multiple step points or shift positions.

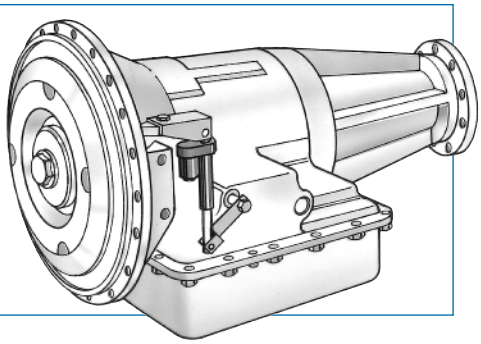

Bus and van doors

Compact actuators fit above doors and open or close with the flick of a switch. Actuators are also used to lower stairs and extend flashing "STOP" signs on school buses.

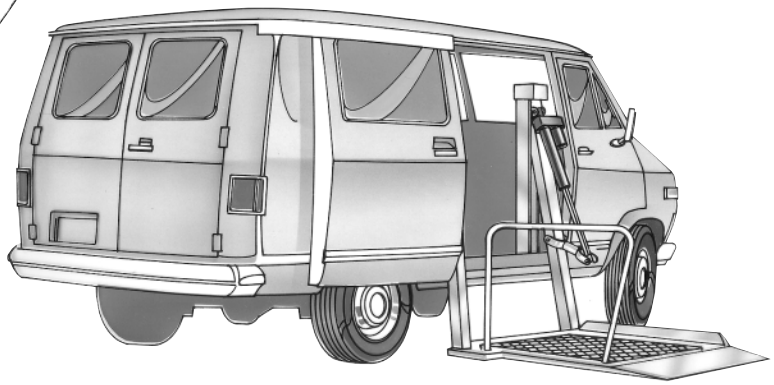

Wheelchair lift

Actuators are used for wheelchair lifts, positioning and locking as well as for parking brake engagement and opening and closing doors and vents. With infra-red remote controls, doors and lifts can be operated as the wheelchair approaches the van providing increased security and weather protection.

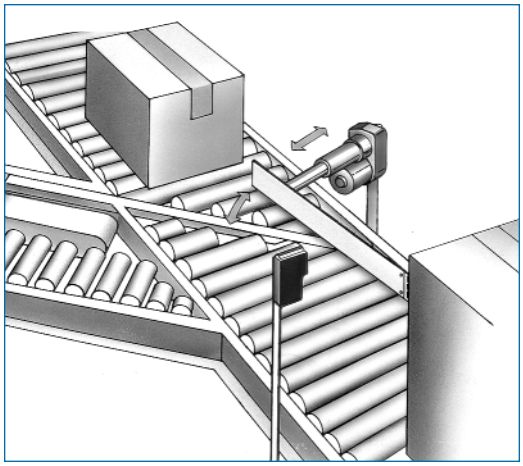

Conveyor gate diverter

An Electrak actuator extends the conveyor gate to route boxes to the desired work station. Easily interfaced with Warner Electric Photoscanners or other electrical switching devices.

Sprayer booms and heads

The load limiting clutch prevents damage to the actuator or equipment when extending or retracting the spray booms. Sprayer nozzles can be precisely positioned.

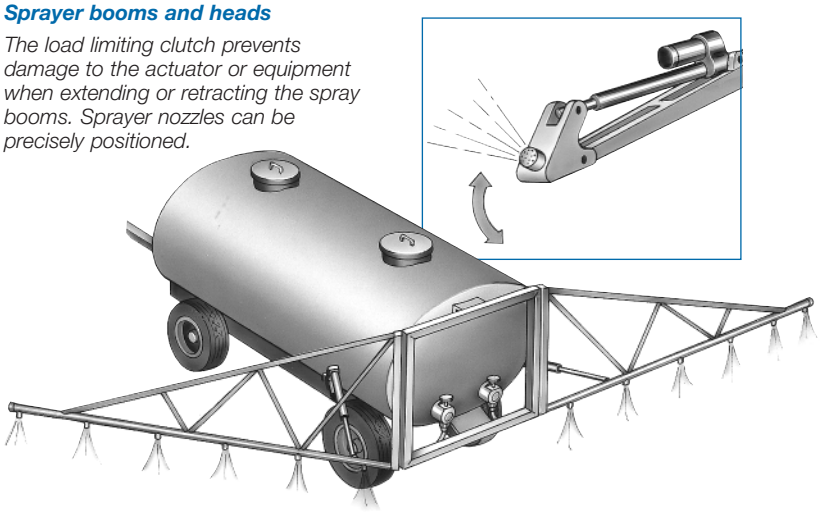

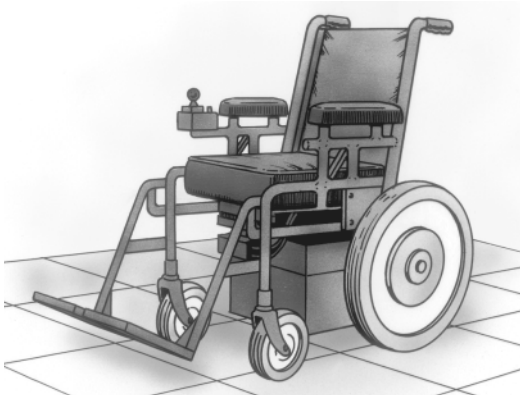

Wheelchair

Actuators are used to tilt and recline the wheelchair and also to raise and lower each leg support.

Selection

Selection procedure

Step 1. Determine load/speed

Select the actuator which has the optimum load and extension speed best suited for your application. See the following specification pages.

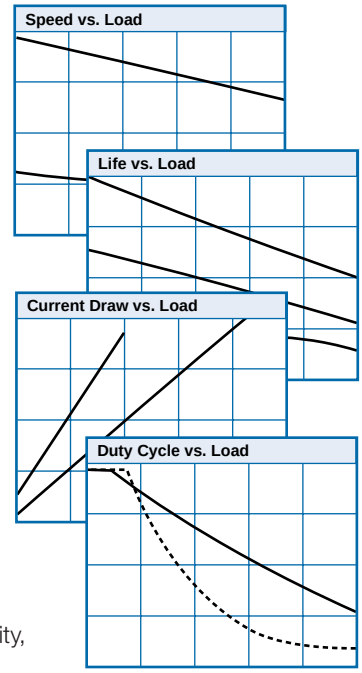

Step 2. Compare life and duty cycle

Compare actuator performance based on life vs. load and duty cycle vs. load curves provided for each Electrak actuator.

Step 3. Select length

Choose the desired stroke length from the Quick Selection Guide on pages 8-9 or from the Electrak specifications pages 10-27.

Step 4. Verify design considerations

Duty Cycle. At full load capacity, all Electrak actuators have a 25% duty cycle. Duty cycle is the amount of "on time" vs. "cooling time." For example, the 25% duty cycle actuator will run 15 seconds and needs 45 seconds rest for a 1 minute total cycle time.

Side loading and shock loading restrictions. Side loading the actuator impairs actuator performance and will dramatically reduce life. Side loading and cantilever mounting should always be eliminated through proper machine design practices. Although actuators can withstand slight shock loads, it is recommended that shock loading be avoided as much as possible.

Mounting. Basically, two mounting styles are available. Be sure that the selected actuator's mounting configuration is adaptive to the application.

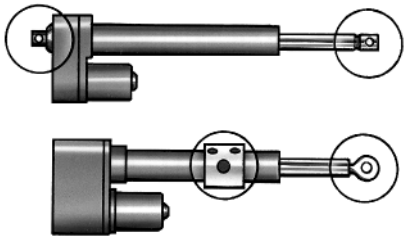

Step 5. Select control

Designed for use with Electrak actuators, the MCS-2000 series controls are available with all the features from simple on-off controls with basic extend/retract functions, or complete controls with membrane control function switches and an LCD digital display for accurate positioning readout. See page 28 for control selection.

Quick Reference Guide

	E050	E150
	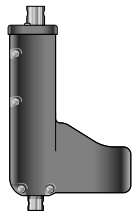	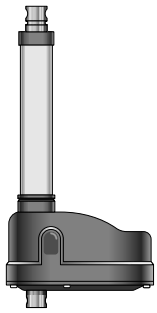
Input Voltage	12, 24 VDC	12, 24, 36 VDC, 115 VAC
Load Capacity (lbs.)	25, 50, 112	110, 225, 450
Stroke Length (inches)	2, 4, 6, 8	1, 2, 4, 6, 8, 10, 12, 14, 16
Type of Lead Screw	Acme screw	Acme screw
Duty Cycle at Full Load	25%	25%
Load Limiting Clutch	Yes	No
Limit Switches	Fixed end of Stroke Standard	Optional adjustable end of stroke
Feedback	Optional Potentiometer	Optional Potentiometer
Motor Overload Protection	Yes	Yes
Restraining Torque (max)	None - internally restrained	None - internally restrained
Environment	IP56	IP56
Standard Control	DE14-1E - controls 1 actuator	DF14-1F - controls 1 actuator
Optional Control(s)	DE14-2E - controls 2 actuators	DF14-2F - controls 2 actuators

* Consult customer service

1			2	5	10	100	205
With limit switches	With feedback potentiometer	Long life					
12VDC 24VDC	12VDC 24VDC	12VDC 24VDC	12VDC	115VAC 230VAC	12VDC 24VDC	24VDC	115VAC 230VAC
25 75	25 75	25 75	250	500 1000, 1500*	500 1000, 1500*	500 1000, 1500*	500 1000, 1500*
2, 4, 6	2, 4, 6	2, 4, 6	4, 8, 12 18*, 24*	4, 8, 12, 18, 24	4, 8, 12, 18*, 24*	4, 8, 12, 18, 24	4, 8, 12 18, 24
Acme screw	Acme screw	Acme screw	Acme screw	Ball bearing screw	Ball bearing screw	Ball bearing screw	Ball bearing screw
25%	25%	25%	25%	25%	25%	25%	25%
No	No	No	Yes	Yes	Yes	Yes	No
Fixed	Only with MCS-2007 control	Fixed	No	No	No	Adjustable	Adjustable
No	Potentiometer	No	No	No	No	Potentiometer	Potentiometer
Yes	Yes	Yes	Yes	Yes	Yes	Yes	Yes
20 lb. in.	20 lb.in.	20 lb.in	100 lb.in.	100 lb. in.	100 lb. in.	100 lb.in.	100 lb.in.
Washdown 96 hour salt spray	Washdown 96 hour salt spray	Washdown 96 hour salt spray	Washdown 96 hour salt spray	Oily, damp, dirty. Outdoors with drip shield over motor & proper grounding & ground fault protection	Washdown 96 hour salt spray	Washdown 96 hour salt spray	Oily, damp, dirty. Outdoors with drip shield over motor & proper grounding & ground fault protection
MCS-2005 (115VAC) MCS-2006 (230VAC)	MCS-2007 (115VAC) MCS-2008 (230VAC) MCS-2015 MCS-2025	MCS-2005 (115VAC) MCS-2006 (230VAC)	6932-101-054 Relay supplied by customer	MCS-2041 (115VAC) MCS-2042 (230VAC)	MCS-2025 MCS-2015	MCS-2035 MCS-2015 MCS-2025	MCS-2051 (115VAC) MCS-2052 (230VAC)

* Consult customer service

Electrak E050

12 and 24 VDC
30, 60, 112 lb. load capacities

Features

- Short retracted length
- Low cost
- Quiet operation
- IP-56 rated for outdoor use
- Durable, lightweight, corrosion resistant plastic housing
- Available DC voltages: 12 or 24
- Estimated life at rated load is 40,000 cycles minimum

Compact, low cost plastic housing

The Electrak E050 actuator is the new compact, quiet, low priced actuator suitable for a variety of markets and applications. This feature packed actuator has a very short retracted length for applications where space is a premium:

- It is designed to be quiet for medical or office applications.
- It has built in limit switches for end of stroke protection and a clutch for mid stroke protection.
- The colors are molded into the plastic to both eliminate the need for paint and touchup of scratches.
- The actuator has a breather tube in the wiring harness to allow the actuator to operate without drawing water through the seals on the cover tube.
- It is available with a control and pendant for one or two actuators.

The entire actuator has been designed for ease of installation, light weight, quiet operation, no maintenance and low cost.

Typical applications

- Raising and lowering leg supports on powered wheelchairs
- Boat seat back adjustment
- Squeegee lift on floor cleaner
- Throttle control on salt spreader
- Positioning/hiding stereo speakers in autos
- Air valves/damper controls
- Special effects on commercial video games
- Jet ski trim actuator

Specifications

	DE12-17W41-XX	DE12-17W42-XX	DE12-17W44-XX
Dynamic load	112 lbs. max.	60 lbs. max.	30 lbs. max.
Static load	224 lbs. max.	120 lbs. max.	60 lbs. max.
Speed	.48"/sec. @ no load .37"/sec. @ 112 lbs.	.95"/sec. @ no load .72"/sec. @ 60 lbs.	1.9"/sec. @ no load 1.45"/sec. @ 30 lbs.
End play	0.060" max. less clevis	0.060" max. less clevis	0.060" max. less clevis

Restraining torque	Restrained internally
Input voltage	12 or 24 VDC
Amperage (12 VDC)	3.8 amp max. at rated dynamic load
End of stroke	Fixed limit switches
Mid stroke protection	Load limiting clutch
Thermal protection	Internal motor breaker
Lead wires	18 AWG PVC 800
Connectors	Packard Electric Pack-Con
Power switch	Optional DPDT
Temperature	–30° to +180° F (–34° to +82° C)
Environment	IP-56 outdoor use
Duty cycle	25% @ rated load and @ 70°F
Anti-rotation	Tube can rotate max. of 7°

Options

Motor voltage	12 or 24 VDC
Rotary pot	10k, 10 turn
Rear clevis	Crossholes shown std., M3=90° rotated
Stroke length	8" maximum

Controls

DE14 series actuator controls operate Warner Linear's E050 actuators. Available with one or two 24 VDC outputs, the DE14 has a handset to manually control bi-directional motion on each of its control outputs independently. For details see page 30.

Dimensions ( ) denotes millimeters

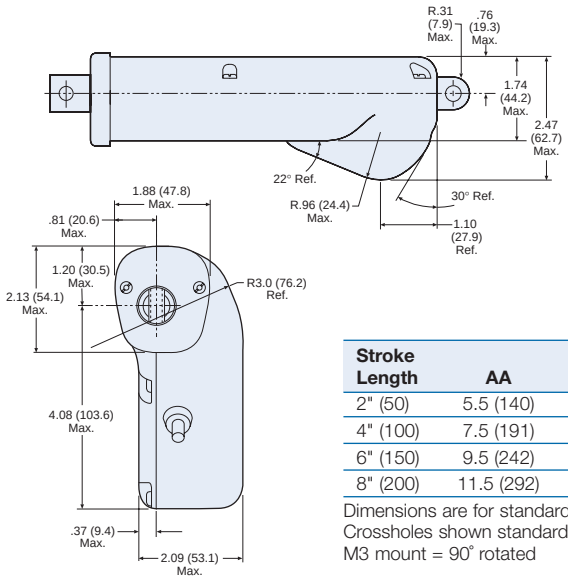

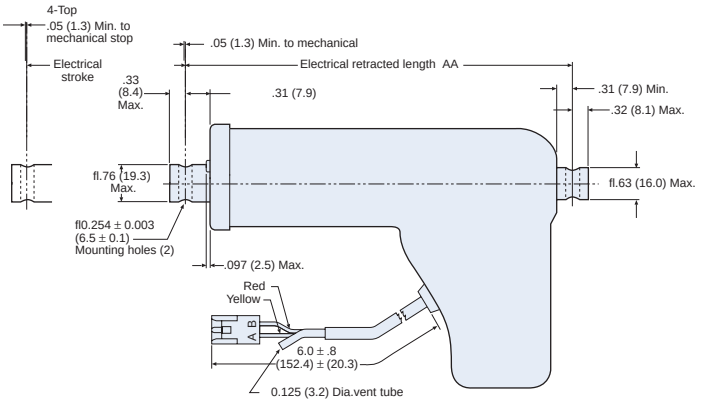

Stroke Length	AA	AA with potentiometer
2" (50)	5.5 (140)	6.75 (172)
4" (100)	7.5 (191)	8.75 (222)
6" (150)	9.5 (242)	10.75 (273)
8" (200)	11.5 (292)	12.75 (324)

Dimensions are for standard units
Crossholes shown standard
M3 mount = 90˚ rotated

Performance Curves

DE 12 Motor Curve

Input voltage: 10-16 volts

Nominal performance at 12 VDC and 70°F (21°C)

Amperage: 3.8 amps max. at rated dynamic load and 70°F (21°C) ambient

DE 24 Motor Curve

Input voltage: 20–28 volts

Nominal performance at 24 VDC and 70°F (21°C)

Amperage: 1.9 amps max. at rated dynamic load and 70°F (21°C) ambient

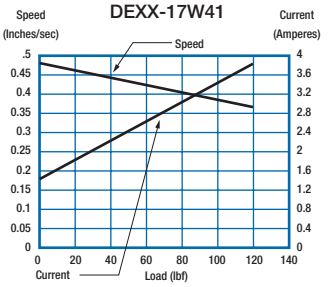

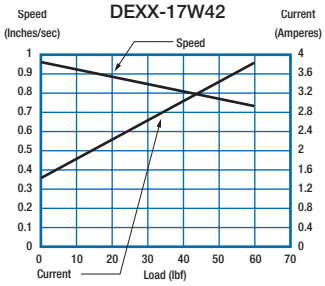

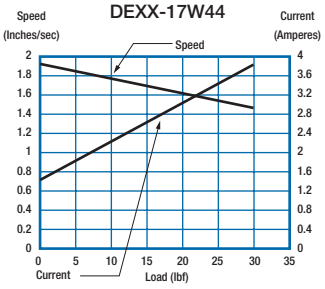

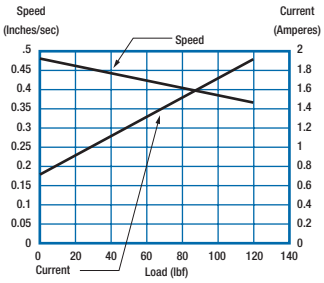

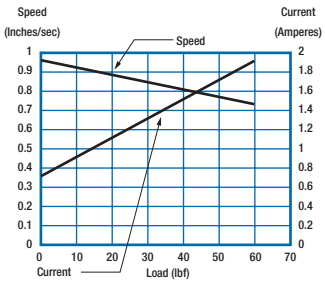

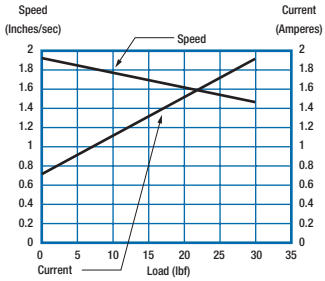

How to Order

D E X X - 1 7 W 4 X - X X X X X X X

Motor Type: D = DC
Actuator Type: E = E050
Motor Voltage: 12 or 24
– =OEM Version; D=Distributor Version
Gear Ratio: 17:1
Screw Type: W = Worm
Screw Diameter: (tenths of an inch)
Screw Lead: (tenths of an inch) 1,2,4
Stroke Length: Inches

Other Options: N = None, W = White Housing
Front Mounting: H = Crosshole
Rear Mounting: H = Crossholes are shown above, M = M3, rotated 90°
Feedback: N = None, P = Potentiometer
Limit Switches: F = Fixed Limits

Example: DE12-17W41-04FNHHN

** If actuator is a customer special then the 15th and 16th characters are always numeric (drawing ref.) instead of alpha. The last 2 characters are alpha for customer identification.

Electrak E150

12 and 24 VDC
110, 225, 450 lb. load capacities

Features

- Low cost
- Quiet operation
- Optional adjustable limit switches
- IP-56 rated for outdoor use
- Durable, lightweight plastic housing
- Available DC voltages: 12, 24
- Estimated life at rated load is 40,000 cycles minimum

Compact, low cost plastic housing

The Electrak 150 is the first of a new series of low priced, quiet actuators with different load and speed ranges.

Take time to look through the cutaway drawing on page 4 to see what makes this actuator different. The optional limit switches are designed to operate with fewer parts. The plastic cover is designed to be recyclable. The actuator has a breather tube in the wiring harness to allow the actuator to operate without drawing water through the seals on the cover tube. The colors are molded into the plastic to both eliminate the need for paint and touchup of scratches. The anodized aluminum cover tube is corrosion resistant and also hides scratches. The extension tube is stainless steel and the front and rear adapters are zinc die castings for corrosion resistance. All of the thrust is resolved through the screw with the plastic housing providing environmental protection but carrying no load. The entire actuator has been created for ease of installation, quiet operation, no maintenance, light weight, and low cost.

Typical applications

- Automatic security gate positioning
- Raise/lower the deck on riding mowers
- Position ladders, vents, discharge chutes on combines
- Tilt/recline on powered wheelchairs
- Position ergonomic tables, chairs
- Position diverters on conveyors
- Position jigs in flexible assembly operations

Specifications

	DF12-10W51-XXX	DF12-10W52-XXX	DF12-10W54-XXX
Dynamic load	450 lbs. max.	225 lbs. max.	110 lbs. max.
Static load	900 lbs. max.	450 lbs. max.	330 lbs. max.
Speed	.75"/sec. @ no load .4"/sec. @ 450 lbs.	1.40"/sec. @ no load .8"/sec. @ 225 lbs.	2.8"/sec. @ no load 1.6"/sec. @ 112 lbs.
End play	0.036" max. less clevis	0.036" max. less clevis	0.046" max. less clevis

Restraining torque	Restrained internally
Input voltage	12, 24 VDC (36 VDC*, 115 VAC*)
Amperage (12 VDC)	2.5-13 (50 amps @ stall)
End of stroke	Stall, optional limit switches
Thermal protection	Internal motor breaker
Lead wires	16 AWG PVC 800
Connectors	Packard Electric 56 Series
Power switch	Optional DPDT
Temperature	–30°, +150° F (–34°, +66° C)
Environment	IP-56 outdoor use
Duty cycle	25% @ 70°F
Anti-rotation	Tube can rotate max. of 7°
Options	
Motor voltage	12, 24 VDC (36 VDC*, 115 VAC*)
Rotary pot	10k, 10 turn
Rear clevis	M-3 rotation (mounting rotated 90°)
Stroke length	16" maximum
Limit switches	Adjustable extend and retract

Controls

DF14 controls operate one or two Electrak 150 actuators. Available with one or two 24 VDC outputs with a handset to manually control bi-directional motion on each of the control outputs. Each actuator can be operated independently and sequentially but not simultaneously. It has quick disconnect sockets for the handset, cable adapters for 5, 10 and 15 foot lengths to connect to each actuator. For details see page 30.

* Consult Customer Service

Dimensions ( ) denotes millimeters

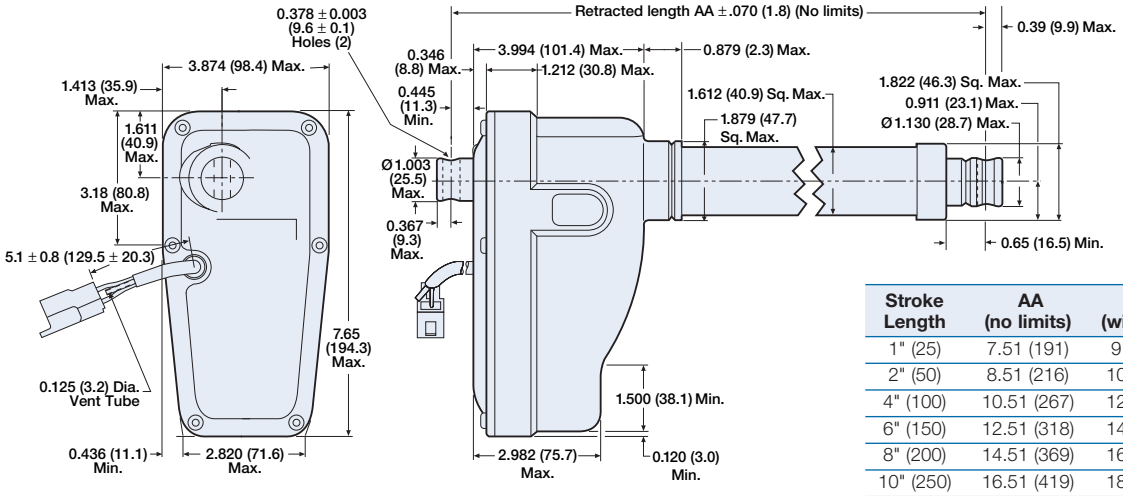

Stroke Length	AA (no limits)	AA (with limits)	Weight lbs.
1" (25)	7.51 (191)	9.01 (229)	4.75
2" (50)	8.51 (216)	10.01 (254)	4.89
4" (100)	10.51 (267)	12.01 (305)	5.18
6" (150)	12.51 (318)	14.01 (356)	5.46
8" (200)	14.51 (369)	16.01 (407)	5.75
10" (250)	16.51 (419)	18.01 (458)	6.03
12" (300)	18.51 (470)	20.01 (508)	6.32
14" (350)	20.51 (521)	22.01 (559)	6.60
16" (400)	22.51 (572)	24.01 (610)	6.88

Dimensions are for standard units.

Performance Curves

DF 12 Motor Curve

Input voltage: 10–16 volts

Nominal performance at 12 VDC and 70°F (21°C)

Amperage: 13 amps max. at rated dynamic load and 70°F (21°C) ambient

Max. amp draw at stall: 50 amps

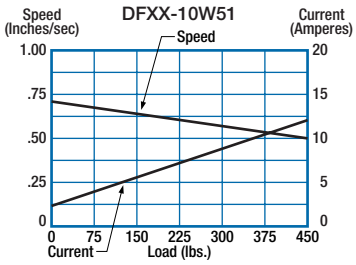

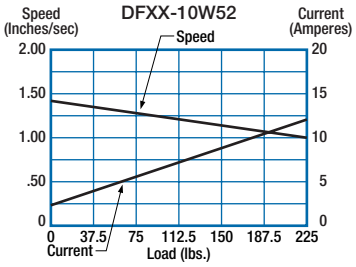

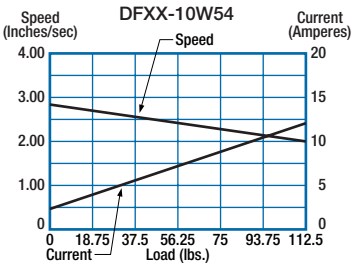

DF 24 Motor Curve

Input voltage: 20–28 volts

Nominal performance at 24 VDC and 70°F (21°C)

Amperage: 6.5 amps max. at rated dynamic load and 70°F (21°C) ambient

Max. amp draw at stall: 25 amps

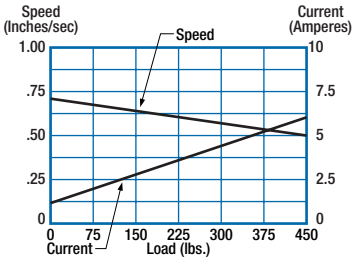

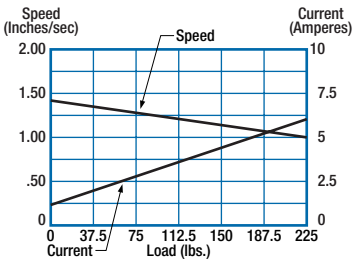

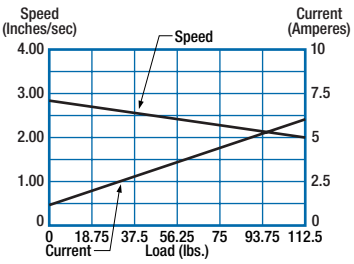

How to Order

D F X X - 1 0 W 5 X - X X X X X X X

Motor Type: D = DC
Actuator Type: F = E150
Motor Voltage: 12, 24, 36

Gear Ratio: 10:1
Screw Type: W = Worm
Screw Diameter: (tenths of an inch)
Screw Lead: (tenths of an inch) 1,2,4
Stroke Length: Inches

Other Options: N = None
Front Mounting: H = Crosshole
Rear Mounting: H = Crossholes are shown above, M = Both front and rear rotated 90°
Feedback: N = None, P = Potentiometer
Limit Switches: L = Limits, N = None

Example: DF12-10W51-04LNHHN

Electrak 1

12 and 24 VDC
25 and 75 lb. load capacities

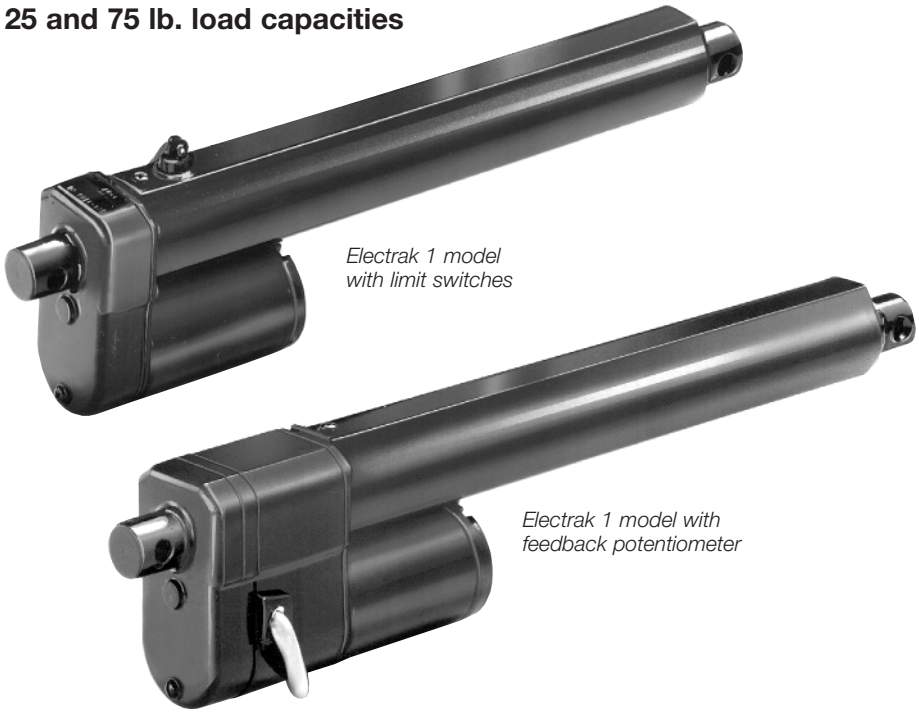

Electrak 1 model with limit switches

Electrak 1 model with feedback potentiometer

Features

- Acme screw drive delivers as much as 75 pounds of force at a minimum extension speed of .6 in./sec.
- Aluminum/zinc alloy housing resists corrosion and provides protection from dirt, dust and humidity. Operates in temperatures from -15° to 150°F
- Clevis style mounting
- 2, 4, or 6 inch stroke lengths standard
- Completely self-contained in a compact housing – 6 inches of travel from a 10 inch package
- Internal limit switches automatically shut-off unit at the end of stroke or feedback potentiometer provides position signal
- Thermal overload protection in motor

Typical applications

- Light load and duty applications
- Short distance operations
- Low cost installations
- Space limitations

Compact, light duty DC actuators

Completely self-contained and sealed for indoor and outdoor use, Electrak 1 actuators fit into small areas without sacrificing power or reliability. The load/length configurations available cover a diverse range of intermittent duty applications.

Functionally, Electrak 1 actuators are easily interchanged with comparable size hydraulic or pneumatic cylinders used on intermittent duty applications. The actuator provides consistent, repeatable performance, even for applications with rigorous operating conditions including extreme temperatures, high humidity, and power input variations. Added advantages include no need for adjustment or maintenance due to wear. Electrak 1 actuators are designed for intermittent duty applications requiring lifting, positioning, sorting, opening, clamping and adjusting.

Electrak 1 actuators are available in 2 load ranges, each range offering stroke lengths of 2, 4, or 6 inches. All models feature 12 or 24 VDC input with a plug-in connector and clevis style mounting for easy installation.

Control

The MCS-2005 is specifically designed for use with the Electrak 1 actuator and the MCS-2007 for the Electrak 1 actuator with feedback. This actuator can also be operated with the MCS-2015 or MCS-2025 control. For details on the controls see page 32.

Specifications

Input	12 VDC and 24 VDC
Load Capacities	25 or 75 lbs. maximum, depending on model
Stroke Lengths	2, 4 or 6 inches
Current Draw	2.8 amps maximum at 24 VDC at rated load 5.6 amps maximum at 12 VDC at rated load
Duty Cycle	25% “on time” at rated load per cycle (77° F)
Motor Protection	Automatic reset thermal overload
Limit Switches	Limit switch protected for automatic shutoff on either end of stroke – non adjustable
Temperature Range	-15° F to 150° F
Drive	Acme screw
End Play	.036 in. maximum
Housing	Aluminum and zinc for corrosion protection
Environment Protection	96 hour salt spray tested
Lead Wires	18 ga. wires 4" long standard
Connector	Supplied. For replacement see page 39
Mounting	Clevis mounting only
Restraining Torque	20 in. lbs.
Static Load	300 lbs. for all strokes

Dimensions ( ) denotes millimeters

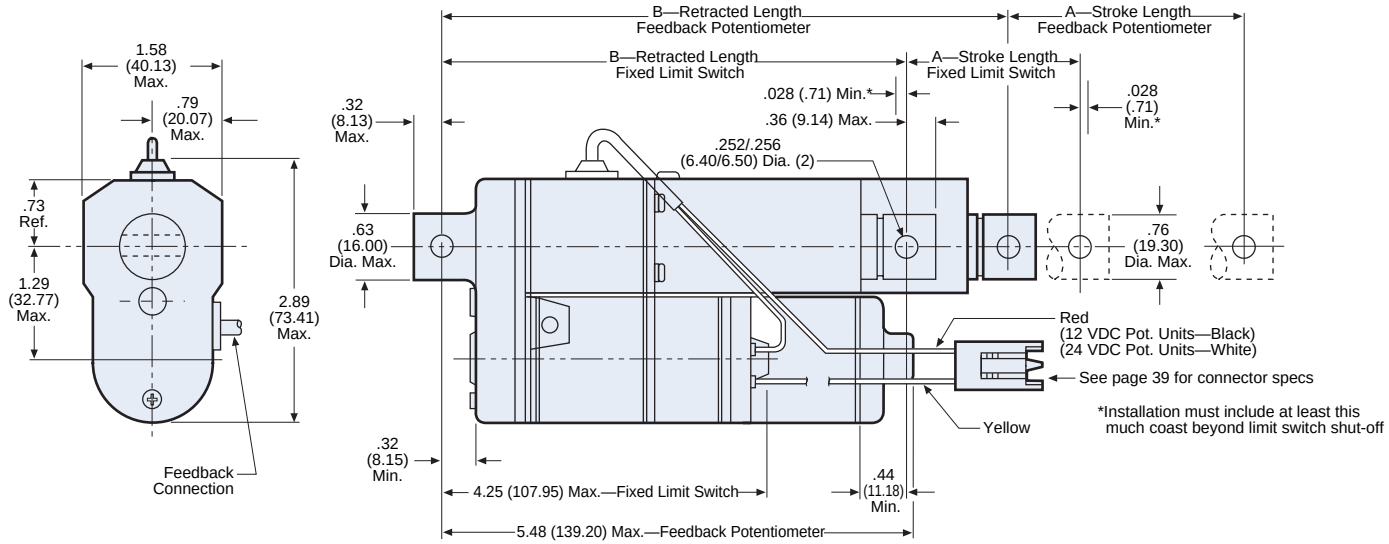

Model Numbers – use when ordering

Stroke Length	Voltage	With fixed limit switches Load Capacity 25 lbs.	75 lbs.	A ±.015 (.38)	B ±.020 (.51)	With potentiometer Load Capacity 25 lbs.	75 lbs.	A ±.065 (1.65)	B ±.120 (3.05)	Weight lbs.
2	12 VDC	S12-09A4-02	S12-17A8-02	1.82	6.24	SP12-09A4-02	SP12-17A8-02	2.31	7.79	1.25
	24 VDC	S24-09A4-02	S24-17A8-02	(46.23)	(158.50)	SP24-09A4-02	SP24-17A8-02	(58.67)	(197.87)	1.25
4	12 VDC	S12-09A4-04	S12-17A8-04	3.82	8.24	SP12-09A4-04	SP12-17A8-04	4.53	10.01	1.35
	24 VDC	S24-09A4-04	S24-17A8-04	(97.03)	(209.30)	SP24-09A4-04	SP24-17A8-04	(115.06)	(254.25)	1.35
6	12 VDC	S12-09A4-06	S12-17A8-06	5.82	10.24	SP12-09A4-06	SP12-17A8-06	6.75	12.22	1.45
	24 VDC	S24-09A4-06	S24-17A8-06	(147.83)	(260.10)	SP24-09A4-06	SP24-17A8-06	(171.45)	(310.39)	1.45

Note: Feedback rate is based on a full range of 4800 ohms, ie: 2" stroke = 2400 ohms per inch, 4" stroke = 1200 ohms per inch, 6" stroke = 800 ohms per inch.

Performance Curves

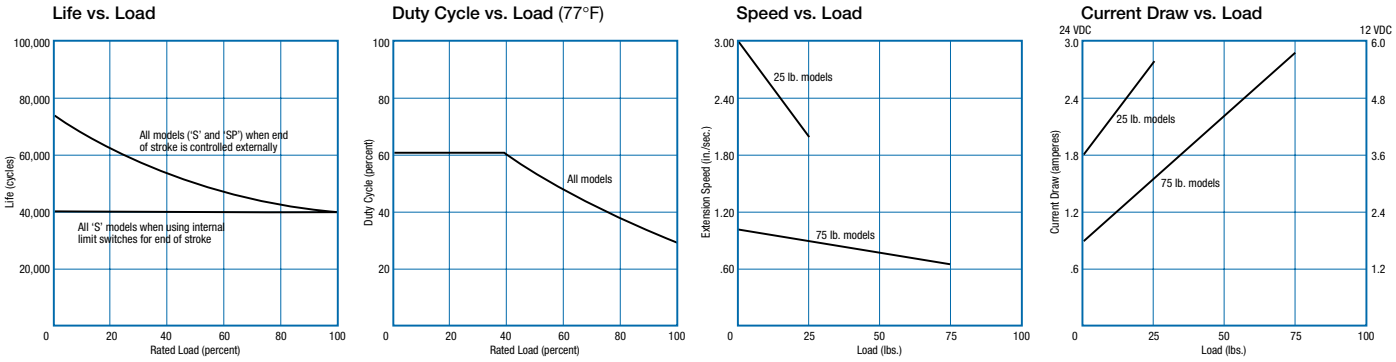

How to Order

S 12–17A8–02

S = Electrak 1 DC actuator with limit switches
SP = Electrak 1 DC actuator with potentiometer
12 = 12 VDC
24 = 24 VDC
09A84 = 25 lb. rating
17A8 = 75 lb. rating
Stroke length in inches

Electrak 1 Long Life

12 and 24 VDC
25 and 75 lb. load capacities

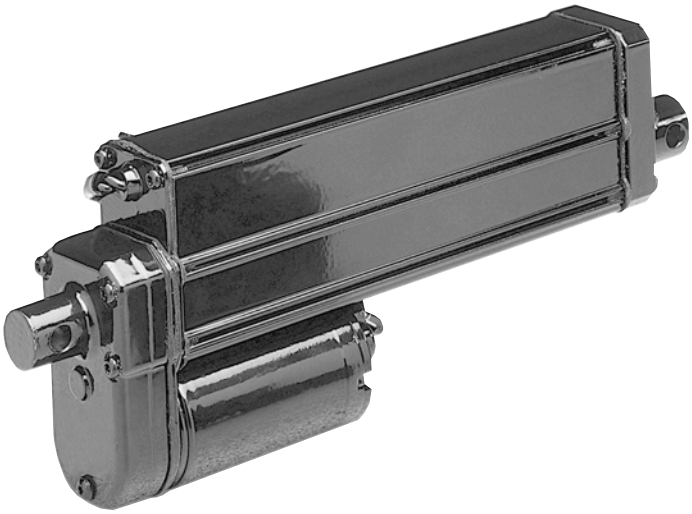

Extended life, compact DC actuators

This is a long life version of the Electrak 1 actuator with fixed mechanical limit switches and an 80,000+ cycle capacity – more than double the life of the standard Electrak 1 actuator. The limit switches control the power to the motor directly to stop the actuator at the end of stroke and do not require power switching relays.

The performance of the actuator is identical to the standard Electrak 1. It is completely self-contained and sealed for indoor and outdoor use and fits into small areas without sacrificing power or reliability. The load/length configurations available cover a diverse range of intermittent duty applications requiring lifting, positioning, sorting, opening, clamping and adjusting.

Physically the only difference is the long life unit is 0.68" taller to accommodate the fixed limit switches. The long life actuator is available in 12 or 24 VDC version, 25 and 75 lb. load ranges, and with 2, 4 and 6 inch stroke lengths. 24 volt versions are compatible with the MCS 2005 and 2006 Electrak controls.

Control

Compatable with MCS-2005 and MCS-2006 control. For details on the controls see page 31.

Features

- Fixed mechanical limit switches
- 2, 4 and 6 inch stroke lengths
- Completely self-contained in a compact housing – 6 inches of travel from a 10 inch package
- Acme screw drive delivers as much as 75 pounds of force at a minimum extension speed of .6 in./sec.
- Aluminum/zinc alloy housing resists corrosion and provides protection from dirt, dust and humidity. Operates in temperatures from -15° to 150°F.
- Clevis style mounting
- Thermal overload protection in motor

Typical applications

Applications that require frequent cycling

- Sweepers, scrubbers
- Mobile off highway equipment
- Agricultural and industrial machinery

Specifications

Input	12 VDC and 24 VDC
Load Capacities	25 or 75 lbs. maximum
Stroke Lengths	2, 4 or 6 inches
Current Draw	3.0 amps maximum at 24 VDC at rated load 5.0 amps maximum at 12 VDC at rated load
Duty Cycle	Intermittent, 25% “on time” at rated load per cycle (70° F)
Motor Protection	Automatic reset thermal overload
Limit Switches	Internal limit switches shutoff on either end of stroke
Thermal Protection	Automatic resetting thermal breaker enclosed in motor housing
Temperature Range	-15° F to 150° F
Drive	Acme screw
Connector	Supplied. For replacement see page 39
Mounting	Clevis mounting only
Restraining Torque	Actuator is internally restrained. Extension tube is keyed to cover tube.
Static Load	300 lbs. for all strokes

Dimensions ( ) denotes millimeters

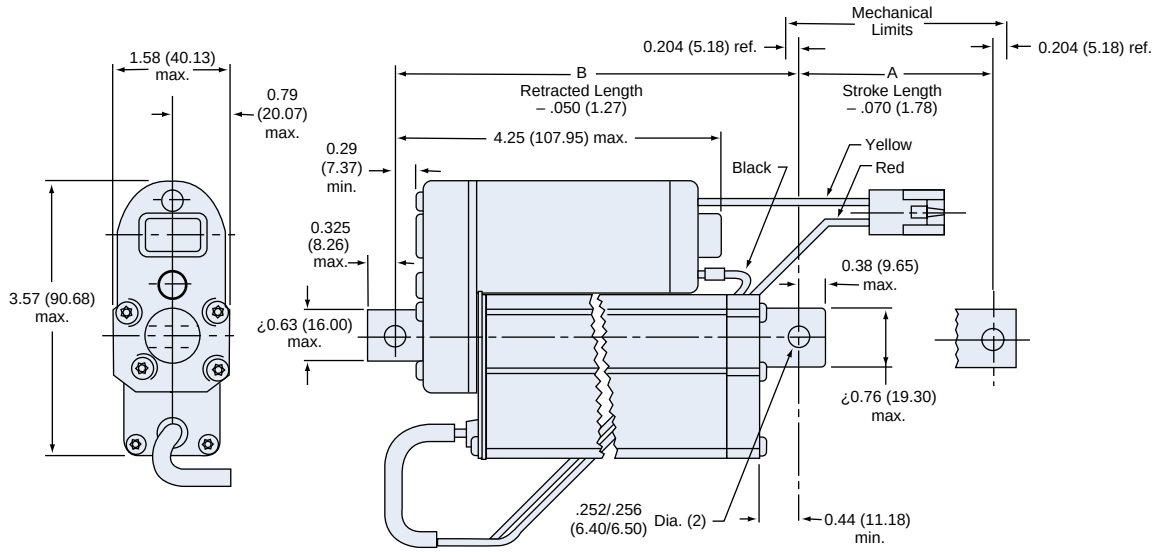

Model Numbers – use when ordering

Stroke Length	25 lb. Capacity 12 VDC	25 lb. Capacity 24 VDC	75 lb. Capacity 12 VDC	75 lb. Capacity 24 VDC	A	B	Weight lbs.
2	SL12-09A4-02	SL24-09A4-02	SL12-17A8-02	SL24-17A8-02	1.900 (48.26)	6.34 (161.04)	1.70
4	SL12-09A4-04	SL24-09A4-04	SL12-17A8-04	SL24-17A8-04	3.900 (99.06)	8.34 (211.84)	1.90
6	SL12-09A4-06	SL24-09A4-06	SL12-17A8-06	SL24-17A8-06	5.900 (149.86)	10.34 (262.67)	2.10

Performance Curves

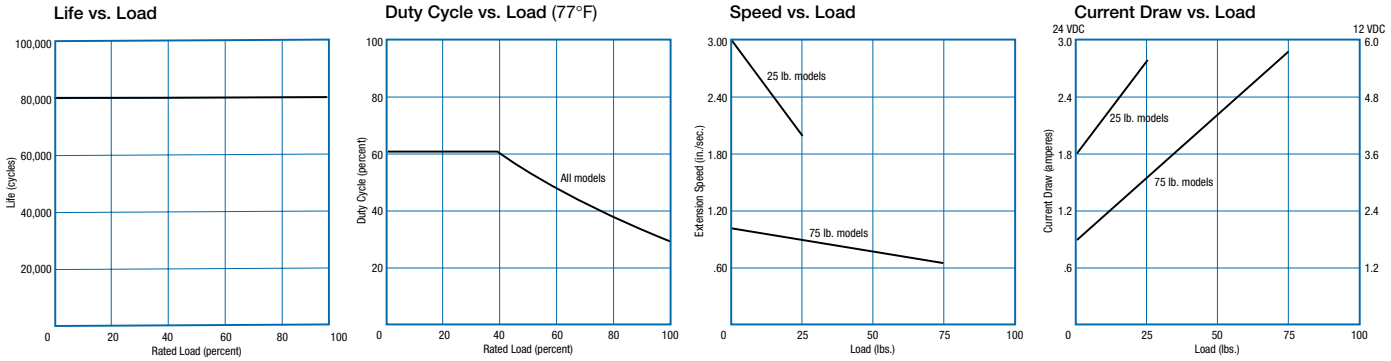

How to Order

SL 12–17A8–02

SL = Electrak 1 DC actuator with long life limit switches
12 = 12 VDC
24 = 24 VDC
09A4 = 25 lb. rating
17A8 = 75 lb. rating
Stroke length in inches

Electrak 2

12 VDC
250 lb. load capacity

Features

- 250 lb. load capacity
- 4, 8, or 12 inch stroke models
- 12 VDC operation
- Steel spur gears in drive system
- Maintenance free operation
- Clevis mounting
- Stainless steel extension tube
- Self-locking acme screw drive system
- Thermal overload protection in motor
- 25% duty cycle
- Two speed ranges available

Typical applications

- Medium load and duty cycle
- Battery powered applications

Economical, general purpose DC actuator

The Electrak 2 linear actuator is an economical model designed for relatively light load applications. It incorporates most of the features found in higher priced models, but utilizes a heavy duty acme screw drive system.

The Acme screw is self-locking and therefore does not need a brake to prevent backdriving the load.

A built in overload clutch slips when the factory-set load limit is exceeded.

The 12 VDC motor is weather-protected and ideally suited for battery powered applications such as custom vans, garden tractors, or emergency power supplies. The motor also has built in thermal switches which prevent the motor from overheating due to too high a duty cycle.

Control

6932-101-054

Remote switch in enclosure is suitable for operating Electrak 1, 2, 5, 10, and 100 actuators. For details see page 29.

Specifications

Input	12 VDC
Load Capacities	250 lbs.
Stroke Lengths	4, 8 or 12 inches (also 18 and 24 inches)*
Current Draw	20 amps maximum for high speed model, 11 amps maximum for standard model
Duty Cycle	25% “on time” at rated load and 77° F
Motor Protection	Automatic reset, thermal overload
Overload Protection	Ball detent overload clutch
Temperature Range	-15° F to 150° F
Drive	Acme screw
Lead Wires	14 gauge
Housing	Zinc
Connector	Packard series 56 (included)
Mounting	Clevis mounting only
End Play	.080 maximum
Static Load	1000 lbs. for all models
Wiring Diagram	See page 29

* Consult customer service.

Dimensions ( ) denotes millimeters

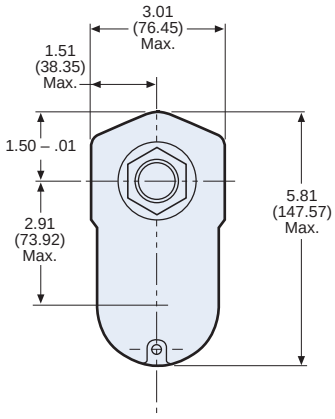

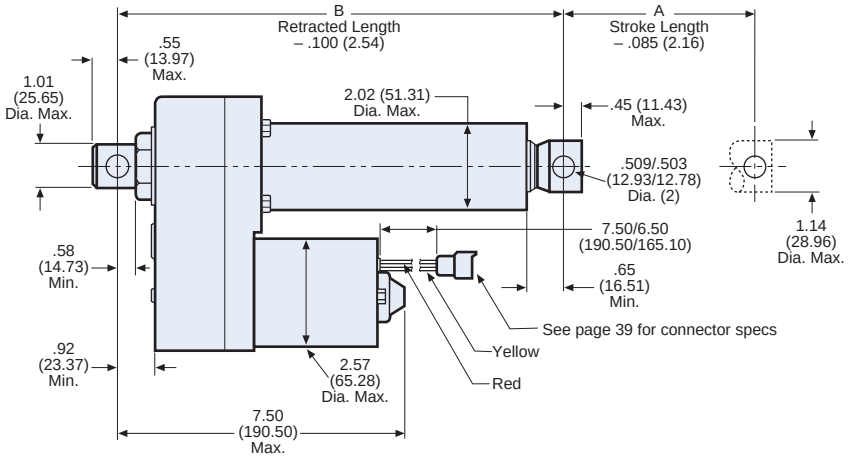

Model Numbers (use when ordering)

Stroke* Length	Voltage	250 lb. Load Capacity Standard	High-speed	A	B	Weight lbs.
4	12 VDC	D12-20A5-04D	D12-10A5-04D	4.00 (101.60)	10.32 (262.13)	10.00
8	12 VDC	D12-20A5-08D	D12-10A5-08D	8.00 (203.20)	14.32 (363.73)	10.72
12	12 VDC	D12-20A5-12D	D12-10A5-12D	12.00 (304.80)	18.32 (465.33)	11.44

* For longer stroke lengths – contact the factory.

Performance Curves

Life vs. Load

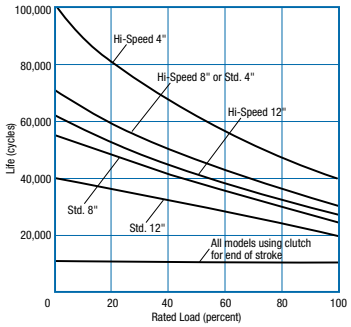

Duty Cycle vs. Load (77°F)

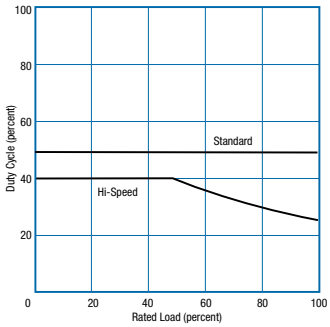

Speed vs. Load

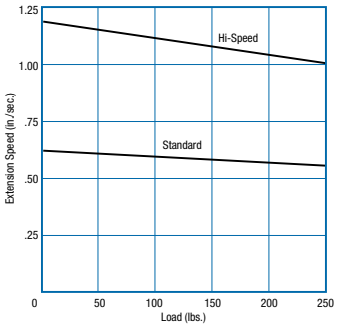

Current Draw vs. Load (12VDC)

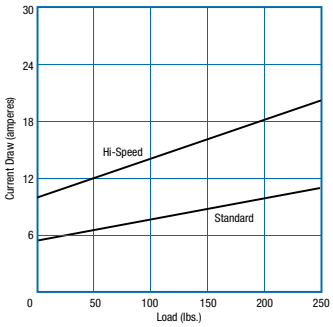

How to Order

D 12–20 A 5–04 D

D = DC actuator
12 = voltage
20 = gear ratio
A = acme screw
5 = screw lead 1/5" or .200
Stroke length in inches
Distributor model

Electrak 5

115 and 230 VAC
500, 1000 and 1500* lb. capacities

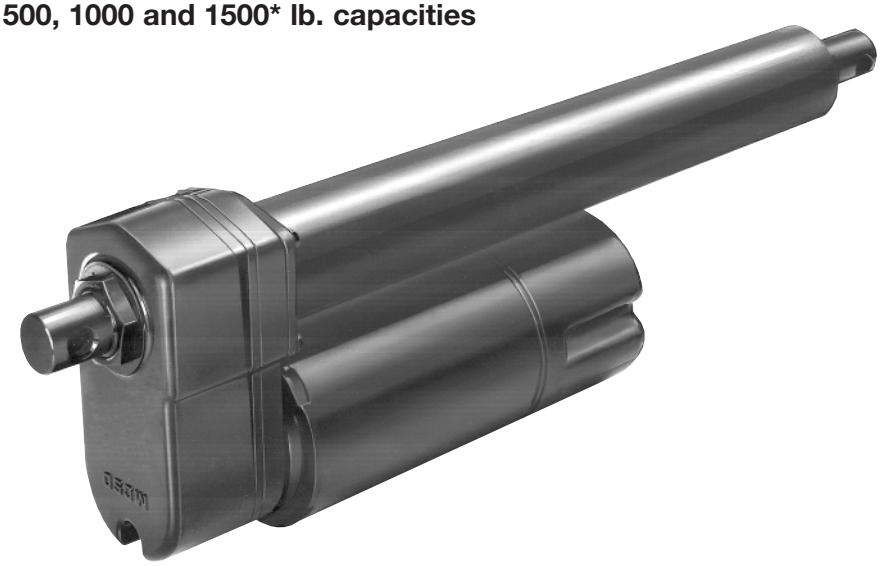

General purpose AC actuator

The Electrak 5 is designed for intermittent duty applications and provides maximum thrust of 500 pounds. or 1000 pounds. Since it is powered by 115 VAC or 230 VAC, the Electrak 5 actuator can be easily wired and can be controlled by a simple pushbutton switch or relay for remote control of hard-to-reach operations such as opening or closing an overhead window.

Consisting of an AC motor, gear train and ball bearing screw drive system, Electrak 5 actuators feature quality construction with a stainless steel extension tube and slip clutch to protect the unit from overloading.

Rated for 25% duty cycle for in-plant applications, the Electrak 5 must be clevis mounted. Standard lengths include 4, 8, 12, 18 and 24" strokes. A capacitor is not included with the actuator.

Control

The MCS-2041 and MCS-2042 controls were designed specifically to operate the Electrak 5 actuators. The capacitor is prewired to the terminal strip and a convenient rocker switch on the cover extends or retracts the actuator. For more details see page 34.

Features

- 500, 1000 and 1500* lb. load capacity models
- New stronger housing
- UL recognized and CSA certified
- Highly efficient ball bearing screw drive system
- 4, 8, 12, 18, or 24 inch stroke models
- Load limiting clutch
- Metal spur gears
- Stainless steel extension tube
- Anti-coast motor brake for accurate positioning
- Heavy duty 115 VAC 60 Hz only or 230 VAC 50/60 Hz single phase motor
- Thermal overload protects actuator in the event of a stall or an overload or high duty cycle condition. Resets automatically.

Note: A capacitor must be ordered when not using the MCS-2041 or MCS-2042 controls.

Note: Maximum life is 50,000 starts and stops assuming that external limit switches are used for end of stroke direction instead of ratcheting the clutch.

Typical applications

- Ergonomic lift tables
- Conveyor diverter
- Open and close windows, bins

Specifications

Input	115 VAC 60 Hz or 230 VAC 50/60 Hz
Load Capacities	500, 1000 or 1500* lbs. maximum
Stroke Lengths	4, 8, 12, 18, or 24 inches
Current Draw	2.85 amps maximum at rated load 115 VAC; 1.55 amps maximum at rated load 230 VAC
Duty Cycle	25% “on time” at rated load per cycle 77° F (max. on time 45 sec.) See page 34 for calculating “Duty Cycle” (Question #1)
Motor Protection	Automatic reset thermal overload in motor windings
Temperature Range	-15° F to 150° F
Drive	Ball bearing screw
Housing	Zinc
Cable	18 ga., 5 conductor cable
Overload Protection	Ball detent overload clutch
Restraining Torque	100 lb. in. max.
Capacitor	Included in MCS-2041 or MCS-2042 or must be ordered separately
Capacitor	115V = 35 MFD 240 VAC Part No. 9200-448-002 230V = 10 MFD 370 VAC Part No. 9200-448-003
End Play	.040 in. max.
Static Loads	2500 lbs. for all strokes
Wiring Diagram	See page 34

Electrak 5 actuators are a recognized component per UL E83959 and certified per CSA LR51515
CE label available for selected models – contact the factory.

* Contact the factory for applications with loads exceeding 1000 lbs.

Dimensions ( ) denotes millimeters

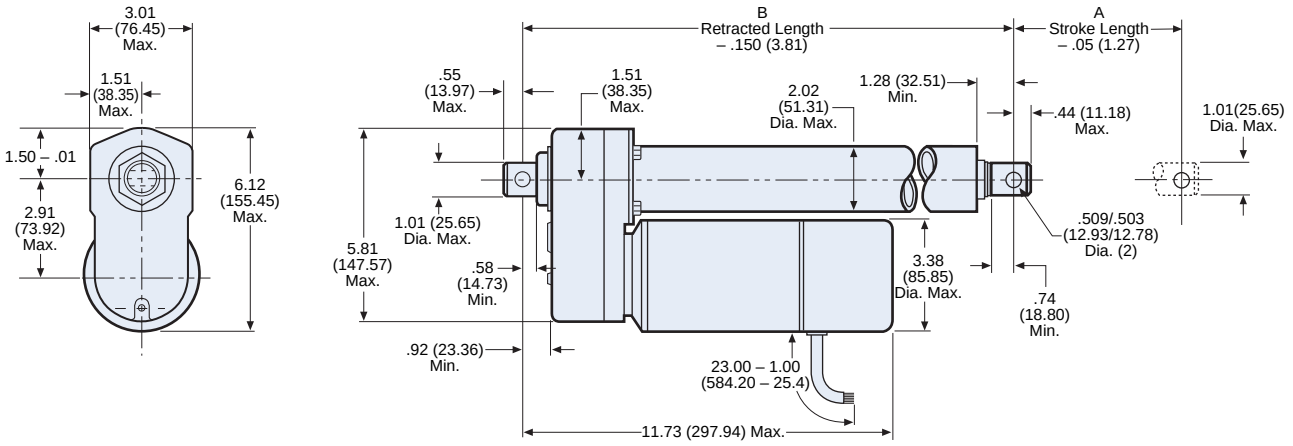

Model Numbers – use when ordering

Stroke Length	500 lb. Capacity 115VAC	500 lb. Capacity 230VAC	1000 lb. Capacity 115VAC	1000 lb. Capacity 230VAC	A	B	Weight lbs.
4	A12-05B5-04D	A22-05B5-04D	A12-10B5-04D	A22-10B5-04D	4.00 (101.60)	14.95 (379.73)	14.40
8	A12-05B5-08D	A22-05B5-08D	A12-10B5-08D	A22-10B5-08D	8.00 (203.20)	18.95 (481.33)	15.24
12	A12-05B5-12D	A22-05B5-12D	A12-10B5-12D	A22-10B5-12D	12.00 (304.80)	22.95 (582.93)	16.08
18	A12-05B5-18D	A22-05B5-18D	A12-10B5-18D	A22-10B5-18D	18.00 (457.20)	28.95 (735.33)	17.34
24	A12-05B5-24D	A22-05B5-24D	A12-10B5-24D	A22-10B5-24D	24.00 (609.60)	34.95 (887.73)	18.60
Controls	MCS-2041	MCS-2042	MCS-2041	MCS-2042	—	—	—
*Capacitor	9200-448-002	9200-448-003	9200-448-002	9200-448-003	—	—	—

* Capacitor must be ordered when not using the MCS-2041 or MCS-2042 controls
Additional models including end of stroke limit switches are available – contact the factory.

Performance Curves

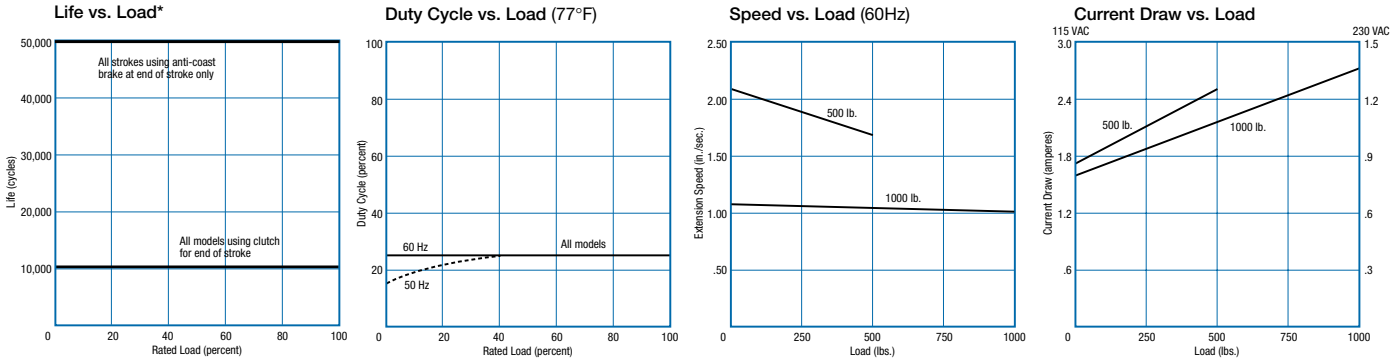

How to Order

A 12–10 B 5–04 D

A = AC actuator
12 = 120 volts
22 = 230 volts
10 = gear ratio
B = ball screw
5 = screw lead 1/5” or .200
Stroke length in inches
Distributor model

Electrak 10

12 and 24 VDC
500, 1000 and 1500* lb. load capacities

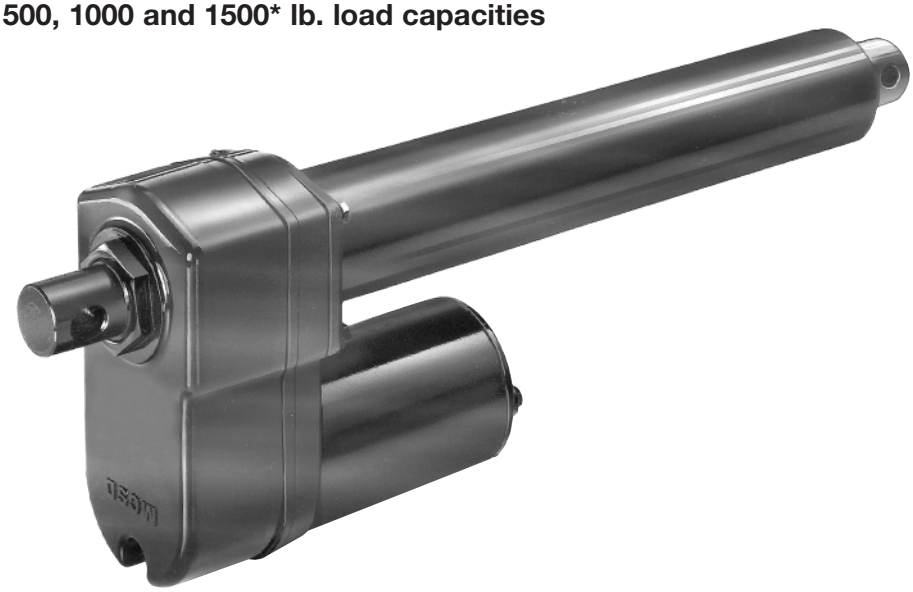

Features

- Clevis mounting
- Protective seal
- Sturdy steel cover tube
- Ball bearing screw drive systems
- Overload clutch
- 4, 8 or 12" stroke lengths
- Stainless steel extension tube
- Rugged spur gearing
- 12 or 24 VDC
- Lifetime lubrication of gears
- Thermal overload protection

Typical applications

- Heavy duty platform lifts
- Bench clamps
- Door control
- Battery powered applications

General purpose DC actuator

Electrak 10 models incorporate a ball bearing screw drive system for applications requiring maximum load capacity. A specially designed anti-back driving brake holds tension or compression loads in position when the actuator is not in use. This holding brake activates automatically when the actuator is turned off and will continue to hold the load in position without power consumption, until the actuator is started.

Design features such as strong alloy housing, reinforced end plugs and rugged spur gearing are standard with the Electrak 10 series.

The Electrak 10 series provides as much as 1500* pounds of force from a 12" long package. Twelve inches of linear travel is available from an overall package length of just 20 inches.

Control

The MCS-2025 control provides 24 VDC output power for use with the Electrak 10 actuator. Membrane switches, dynamic braking and other features make the control and actuator an efficient, reliable system. The MCS-2015 control can also be used to operate this actuator. For more details see the controls selection section beginning on page 32.

Specifications

Input	12 or 24 VDC
Load Capacities	500, 1000 or 1500* lbs. maximum, depending on model
Stroke Lengths	4, 8, 12 inches (also 18 and 24 inches)*
Current Draw	7 amps at 24 VDC – 1000 lb. capacity at full load 14 amps at 12 VDC – 1000 lb. capacity at full load 14 amps at 24 VDC – 500 lb. capacity at full load 28 amps at 12 VDC – 500 lb. capacity at full load
Duty Cycle	25% “on time” at rated load per cycle (77° F)
Motor Protection	Automatic reset thermal overload in motor winding
Overload Protection	Ball detent overload clutch
Temperature Range	-15° F to 150° F
Environment Protection	96 hour salt spray tested
Drive	Ball bearing screw
Housing	Zinc
Connector	Packard series 56 (included)
Lead Wires	14 gauge
Mounting	Clevis mounting only
Restraining Torque	100 in. lb.
End Play	.040 max.
Static Load	3000 lbs.
Wiring Diagram	See page 32

* Contact the factory for applications with loads exceeding 1000 lbs.

Dimensions ( ) denotes millimeters

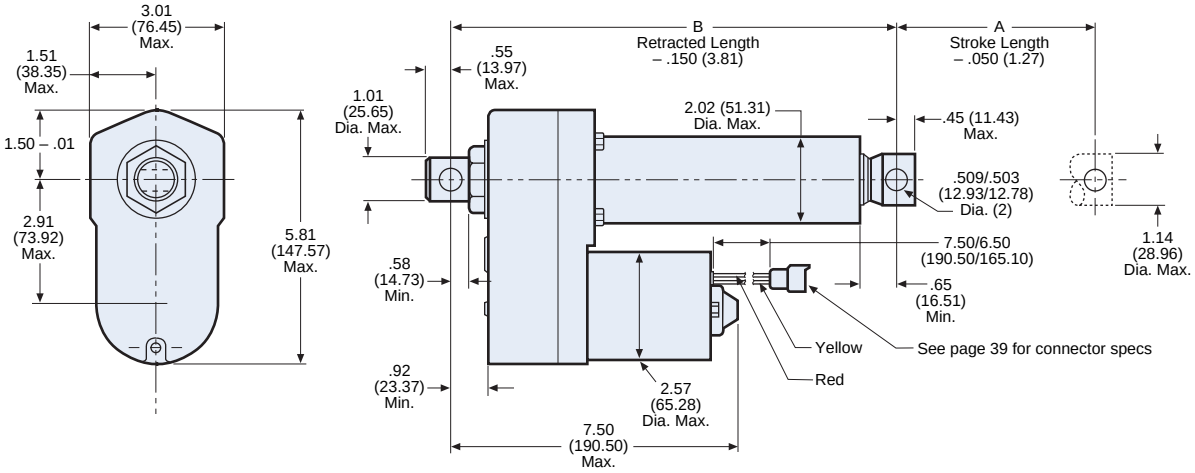

Model Numbers – use when ordering

Stroke Length*	Voltage	Load Capacity 500 lbs.	Load Capacity 1000 lbs.	A	B	Weight lbs.
4	12 VDC	D12-05B5-04	D12-20B5-04	4.00	11.89	11.30
	24 VDC	D24-05B5-04	D24-20B5-04	(101.60)	(302.21)	11.30
8	12 VDC	D12-20B5-08	D12-20B5-08	8.00	15.89	12.02
	24 VDC	D24-05B5-08	D24-20B5-08	(203.20)	(403.81)	12.02
12	12 VDC	D12-05B5-12	D12-20B5-12	12.00	19.89	12.74
	24 VDC	D24-05B5-12	D24-20B5-12	(304.80)	(505.41)	12.74

*For longer stroke versions or models including other options – contact the factory.

Performance Curves

Life vs. Load

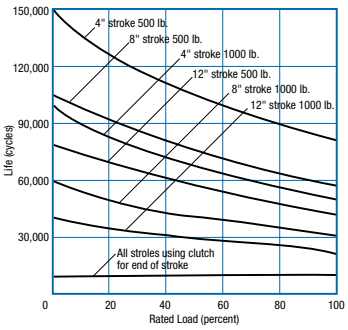

Duty Cycle vs. Load (77°F)

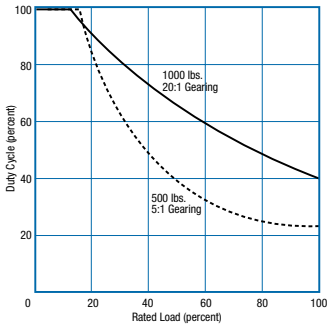

Speed vs. Load

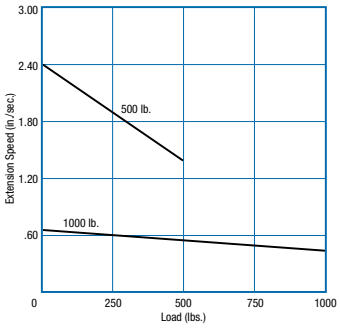

Current Draw vs. Load

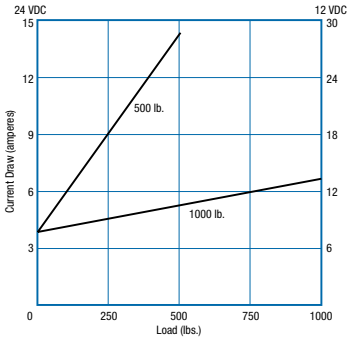

How to Order

D 12–10 B 5–04

- D = DC actuator
- 12 = 12 volts
- 24 = 24 volts
- 10 = gear ratio
- B = ball screw
- 5 = screw lead 1/5" or .200
- Stroke length in inches

Electrak 100

24 VDC
500, 1000 and 1500* lb. load capacities

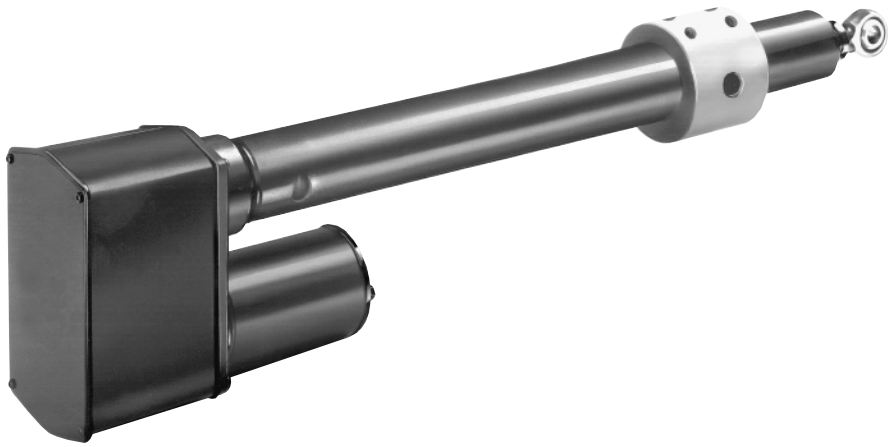

DC actuator with feedback

The Electrak 100 features a potentiometer for precise positioning feedback to a MCS-2035 control unit. Multiple step positioning is available when the Electrak 100 is integrated with a programmable controller system. Integral adjustable limit switches automatically shut off the actuator within the operating ranges you set.

Fully gasketed housing and motor safely seals all internal components from harsh environments. Additional O-ring and wiper seals on the extension tube make the Electrak 100 equally effective for use indoors or outside.

Electrak 100 actuators are available in 3 load ranges; 500, 1000 or 1500* pounds. Each range offers stroke lengths of 4, 8, 12, 18 or 24 inches. All models accept 24 VDC input and include a swivel rod end and adjustable tube mount for flexible mounting.

Control

The MCS-2035 was designed exclusively for the Electrak 100 actuator. The analog meter displays the position of the extension tube as a percent of full stroke. Other control options are the MCS-2015 or MCS-2025. For further details see page 33.

Features

- Wiper and O-ring seals give double protection against dirt, dust and water contamination
- Cover tube stiffeners provide smooth extension and increase load support
- Completely gasketed housing and motor safely seals all wires and internal components for equally effective use indoors or outside
- Permanently lubricated with aircraft quality lubricants – you'll never need to add or change lubricant
- Stainless steel extension tube protects against corrosion
- Warner Linear ball bearing screws are used for high efficiency and positioning accuracy
- Integral holding brake holds position when power is off
- Ball detent overload clutch
- 10,000Ω potentiometer provides accurate, consistent positioning feedback
- Metal spur gears for strength and durability
- Control leads are safely and easily wired to the terminal strip through the 1/2" conduit entrance
- Integral limit switches shut off the actuator automatically within adjustable preset operating ranges

Specifications

Input	24 VDC
Load Capacities	500, 1000 or 1500* lbs. maximum, depending on model
Stroke Lengths	4, 8, 12, 18, or 24 inches
Current Draw	9.1 amps at 24 VDC – 500 lb. capacity at full load 4.8 amps at 24 VDC – 1000 lb. capacity at full load
Duty Cycle	25% "on time" at rated load per cycle (77° F)
Motor Protection	Automatic reset thermal overload in motor winding
Limit Switches	Adjustable limit switch protection for automatic shutoff on either end of stroke
Temperature Range	-15° F to 150° F
Drive	Ball bearing screw
End Play	.035 in. max.
Housing	Zinc
Environment Protection	96 hour salt spray tested
Terminal Strip	Accept up to #14 AWG
Conduit/Cable Entrance	1/2" NPT
Overload Protection	Ball detent overload clutch
Feedback	10KΩ potentiometer, 250Ω/in. change
Mounting	Tube mounting – universal mounting clamp included
Restraining Torque	100 in. lbs.
Static Load	2500 lbs.

* Consult the factory for applications with loads exceeding 1000 lbs.

Dimensions ( ) denotes millimeters

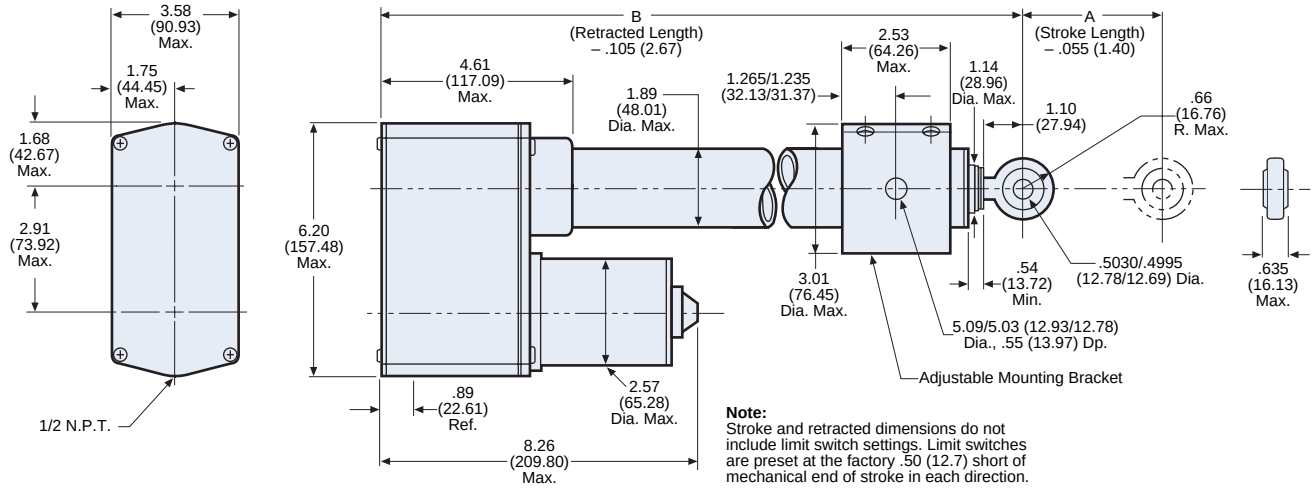

Note:
Stroke and retracted dimensions do not include limit switch settings. Limit switches are preset at the factory .50 (12.7) short of mechanical end of stroke in each direction.

Model Numbers – use when ordering

Stroke Length	Load Capacity 500 lbs.	1000 lbs.	A	B	Weight lbs.
4	P24-05B5-04RD	P24-20B5-04RD	4.00 (101.60)	16.37 (415.80)	15.60
8	P24-05B5-08RD	P24-20B5-08RD	8.00 (203.20)	20.37 (517.40)	16.44
12	P24-05B5-12RD	P24-20B5-12RD	12.00 (304.80)	24.37 (619.00)	17.28
18	P24-05B5-18RD	P24-20B5-18RD	18.00 (457.20)	30.37 (771.40)	18.54
24	P24-05B5-24RD	P24-20B5-24RD	24.00 (609.60)	36.37 (923.80)	19.80

Performance Curves

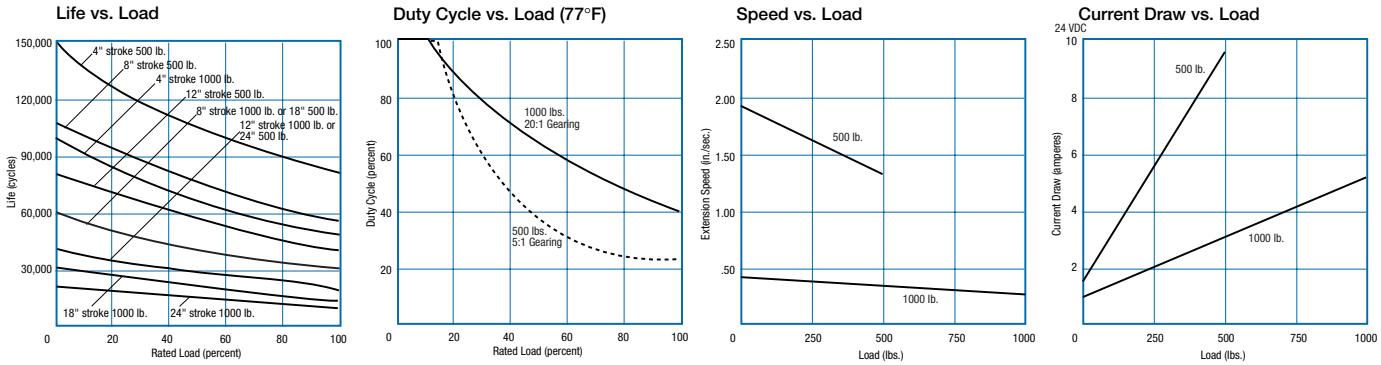

How to Order

P 24–10 B 5–04 RD

- P = Electrak 100 actuator with potentiometer and limit switches
- 24 = 24 volts
- 10 = gear ratio
- B = ball screw
- 5 = screw lead 1/5" or .200
- Stroke length in inches
- Distributor model

Electrak 205

115 and 230 VAC
500, 1000 and 1500* lb. load capacities

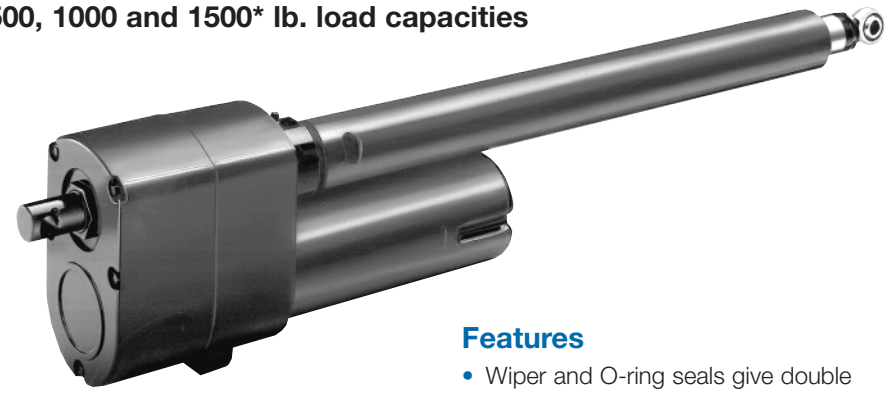

Extended life AC actuator with feedback

The Electrak 205 features a 10-turn potentiometer for precise positioning feedback to an MCS-2051 or MCS-2052 control unit. Multiple step positioning is available when the Electrak 205 is integrated with a programmable controller system. Independently adjustable integral limit switches automatically shut off the actuator within the operating ranges you set.

Fully gasketed housing and motor safely seals all internal components from harsh industrial environments. Additional O-ring and wiper seals on the extension tube make the Electrak 205 effective for use indoors in damp, dirty or oily environments.

Electrak 205 actuators are available in 3 load ranges: 500, 1000 or 1500* pounds. Each range offers stroke lengths of 4, 8, 12, 18 or 24 inches. Models are available for 115 or 230 VAC input and include a swivel rod end and rear clevis for mounting. A capacitor is not included with the actuator.

Order by model number with the appropriate stroke length and load capacity. See chart on page 27.

Note: Capacitor must be ordered when not using the MCS-2051 or MCS-2052 controls.

Note: ER Brake must be replaced every 500,000 cycles. Potentiometers must be replaced every 250,000 to 800,000 cycles depending on stroke length. Motor must be replaced every 375,000 to 1,000,000 cycles depending on stroke length.

Control

The MCS-2051 and MCS-2052 controls were designed specifically for the Electrak 205. Digital position display, membrane switches and prewired capacitor make the control easy to use and install. For more details see page 34.

Features

- Wiper and O-ring seals give double protection against dirt, dust and water contamination
- Cover tube stiffeners provide smooth extension and increase load support
- Completely gasketed housing and motor safely seals all wires and internal components
- Lubricated with aircraft quality lubricants – grease fitting for easy lubrication of thrust bearings
- Rear clevis for pin to pin mounting
- Tube mounting optional
- Integral limit switches shut off the actuator automatically within adjustable preset operating ranges
- 10 turn position potentiometer provides accurate, consistent positioning feedback
- Control leads are safely and easily wired to the terminal strip through the cable entrances
- Metal spur gears for strength and durability
- Thermal overloads in motor windings to protect the motor
- ER brake limits coast and holds position when power is off
- Warner Linear ball bearing screws are used for high efficiency and positioning accuracy
- Stainless steel extension tube protects against corrosion
- UL and CSA listed

Specifications

Input	115 VAC 60 Hz only, or 230 VAC 50/60 Hz
Load Capacities	500, 1000 or 1500* lbs. maximum, depending on model
Stroke Lengths	4, 8, 12, 18, or 24 inches
Current Draw	2.85 amps 115 VAC at full load 1.55 amps 230 VAC at full load
Duty Cycle	25% “on time” maximum (77° F). See page 37 for calculating “Duty Cycle” (Question #1)
Motor Protection	Automatic reset thermal overload in motor winding
Limit Switches	Adjustable limit switch protection for automatic shutoff on either end of stroke, independently, externally adjustable
Temperature Range	-15° F to 150° F
Screw	Ball bearing screw
End Play	.015 in.
Housing	Zinc die cast
Conduit/Cable Entrance	1/2" NPT and 3/4" NPT
Feedback	10,000Ω potentiometer, 385Ω/in. of change
Capacitor	Included in MCS-2051 or MCS-2052 or must be ordered separately
MFC of Capacitor	115V = 35 MFD 240 VAC (Part No. 9200-448-002); 230V = 10 MFD 370 VAC (Part No. 9200-448-003)
Terminal Strip	Accepts up to 14 AWG
Mounting	Pin to pin, tube mounting optional
Restraining Torque	100 in. lbs.
Static Load	Tension load 4000 lb. all strokes. Compression load 2500 lbs. for 24" strokes, 4000 lbs. for all other strokes
Lubrication	Recommended every 25,000 cycles, grease fitting provided

* Contact the factory for applications with loads exceeding 1000 lbs.

Dimensions ( ) denotes millimeters

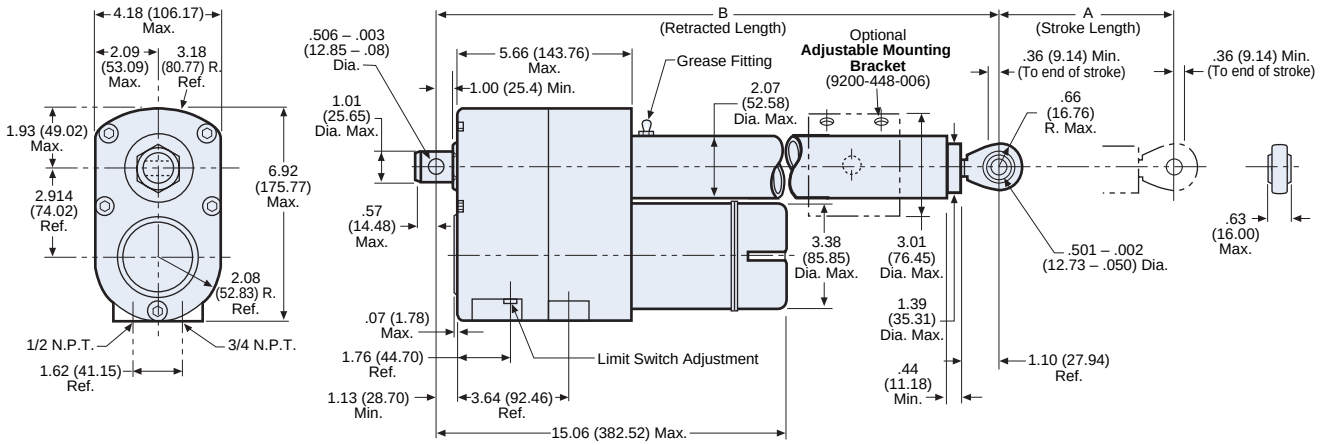

Model Numbers – use when ordering

Stroke Length	500 lb. Capacity† 115VAC	500 lb. Capacity† 230VAC	1000 lb. Capacity† 115VAC	1000 lb. Capacity† 230VAC	A	B	Weight lbs.
4	ALP12-05B5-04D	ALP22-05B5-04D	ALP12-10B5-04D	ALP22-10B5-04D	4.00 (101.60)	22.20 (563.88)	25.50
8	ALP12-05B5-08D	ALP22-05B5-08D	ALP12-10B5-08D	ALP22-10B5-08D	8.00 (203.20)	26.20 (665.48)	27.50
12	ALP12-05B5-12D	ALP22-05B5-12D	ALP12-10B5-12D	ALP22-10B5-12D	12.00 (304.80)	30.20 (767.08)	29.50
18	ALP12-05B5-18D	ALP22-05B5-18D	ALP12-10B5-18D	ALP22-10B5-18D	18.00 (457.20)	36.20 (919.48)	32.50
24	ALP12-05B5-24D	ALP22-05B5-24D	ALP12-10B5-24D	ALP22-10B5-24D	24.00 (609.60)	42.20 (1071.88)	35.50
Controls	MCS-2051	MCS-2052	MCS-2051	MCS-2052	—	—	—
*Capacitor	9200-448-002	9200-448-003	9200-448-002	9200-448-003	—	—	—

* Capacitor must be ordered when not using the MCS-2051 or MCS-2052 controls
† For higher load applications – contact the factory.

Performance Curves

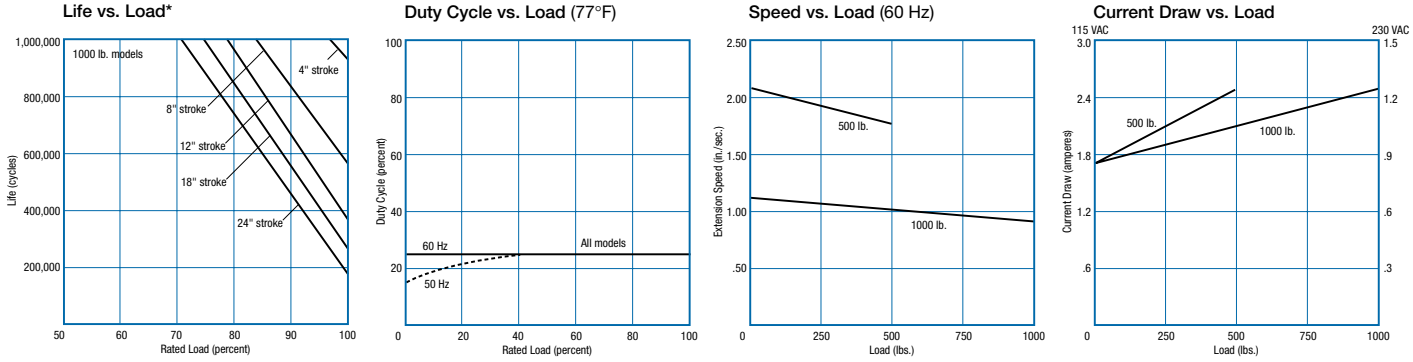

How to Order

A LP 12–10 B 5–04 D

- A = AC actuator
- L = limit switches, P = potentiometer
- 12 = 120 volts
- 22 = 230 volts
- 10 = gear ratio
- B = ball screw
- 5 = screw lead 1/5" or .200
- Stroke length in inches
- Distributor model

Actuator Controls

Warner Linear offers a choice in actuator controls

Whether you plan to operate from a simple pushbutton or a programmable controller, the MCS-2000 series controls can make your system easy to design and install and simple to operate. Designed to drive Electrak actuators, MCS-2000 series controls are equipped with easy-to-use terminal strip input and output wiring, built-in power supply for DC actuators or capacitor for AC models, and three controls have touch sensitive membrane key pads.

Quick Reference Guide

Control	Description	Input Voltage	Actuator Model
Remote Switch	The enclosed remote switch is used to directly operate any Electrak actuator. AC actuators must also have the capacitor wired into the circuit.	12, 24 VDC 115, 230 VAC	All actuators
DE-14 Series 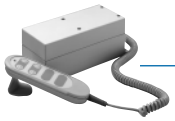	Specific control for Electrak 050 actuator. 115 VAC input. Hand held pendant operator.	115 VAC	Electrak 050
DF-14 Series	Specific control for Electrak 150 actuator. 115 VAC input. Hand held pendant operator.	115 VAC	Electrak 150
MCS-2005/2006	Compact control for one actuator and an auxiliary device such as a photoscanner. Extend/Retract switch, 120 VAC input.	115 VAC 230 VAC	Electrak 1
MCS-2007/2008	Similar to MCS-2005, but with LCD digital display for position feedback and limit switch adjustments in the control.	115 VAC 230 VAC	Electrak 1 with feedback
MCS-2015	Basic power supply for on-off and emergency stop. 115 VAC or 230 VAC input.	115 VAC 230 VAC	Electrak 1 Electrak 10 Electrak 100
MCS-2025	Intermediate control with power supply for on-off, emergency stop, jog, run and remote control functions.	115 VAC 230 VAC	Electrak 1 Electrak 10 Electrak 100
MCS-2035	An advanced control with all the features of the MCS-2025 plus a readout display for positional feedback.	115 VAC 230 VAC	Electrak 100
MCS-2041/2042	Specific control for Electrak 5. MCS-2041 for 115 VAC input and MCS-2042 for 230 VAC input. Extend/Retract switch.	115 VAC 230 VAC	Electrak 5
MCS-2051/2052	Specific control for the new Electrak 205. MCS-2051 for 115 VAC input and MCS-2052 for 230 VAC input. All the advanced features of the MCS-2035 except dynamic braking.	115 VAC 230 VAC	Electrak 205

Remote Switch (6932-101-054)

Use with Electrak 1, 2, 5, 10, 050, 100 and 150

The enclosed remote switch is used to directly operate any Electrak actuator. AC actuators must also have the capacitor wired into the circuit. The switch has a mounting bracket and the wiring diagram is included on the label. The switch is wired between the power supply and the actuator and two momentary contacts are used to extend or retract the actuator.

Features

- Double pole, double throw
- 15A rating at 270 VAC
- Center “off”
- Two momentary contacts
- Pigtails with wire nuts supplied
- Wiring diagram on label
- “L” bracket for easy mounting

Wiring Connections

Electrak 1

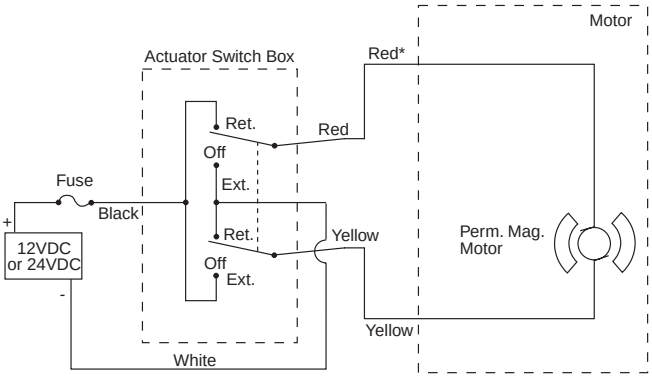

* Note: Red for Electrak 1
White for 12 VDC Electrak 1 with feedback
Black for 24 VDC Electrak 1 with feedback

Electrak 2, 10, 100

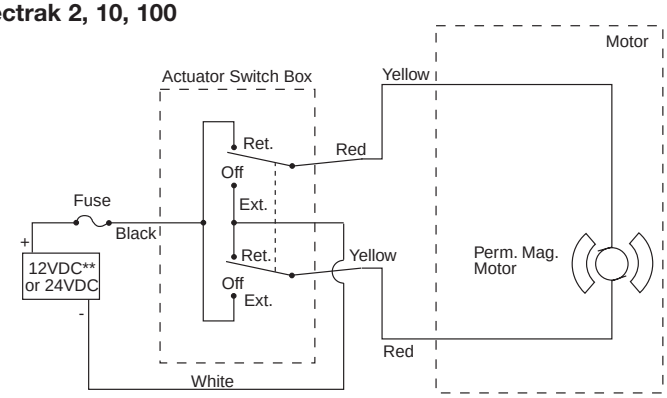

** Note: Electrak 2 is 12 VDC

Electrak 5 (A12-A22 Series)

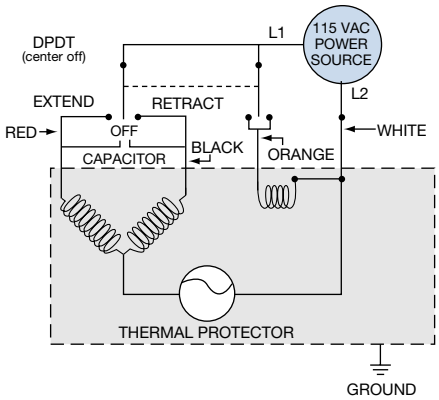

Actuator Controls

DE14 series
Use with Electrak E050

DF14 series
Use with Electrak E150

DE14 and DF14 series actuator controls operate Warner Linear's E050 and E150 actuators respectively. Available with one or two 24 VDC outputs, each has a handset to manually control bi-directional motion on each of its control outputs, independently. It has quick disconnect sockets and cable adapters in 5, 10, and 15 ft. lengths to connect to the actuator. Each output has a circuit breaker that automatically resets approximately 20 seconds after a short circuit is removed. DF14 control also has a built in ELS circuit to protect the Electrak 150 actuator at end of stroke.

Specifications

Input DE14-1E 120 VAC,50/60 Hz
DE14-2E 120 VAC,50/60 Hz
DF14-1F 120 VAC, 50/60 Hz
DF14-2F 120 VAC, 50/60 Hz

Output DE14-1E 24 VDC,one output, 2.5 amps max.
DE14-2E 24 VDC, two output, 2.5 amps per channel max., 5.0 amps total
DF14-1F 24 VDC, one output 6.5 amps max.
DF14-2F 24 VDC, two output 6.5 amps per channel max. 6.5 amps total

Ambient Temperature
15° to 104ºF (-26º to 40ºC)

Duty Cycle 25% max.

Wiring Connections

E050 Wiring

Warner linear actuators should be connected in accordance with the wiring diagram shown below.

Make sure the power is off before attempting to wire the actuator. To extend the actuator, connect yellow to positive and red to negative. To retract the actuator, connect red to positive and yellow to negative.

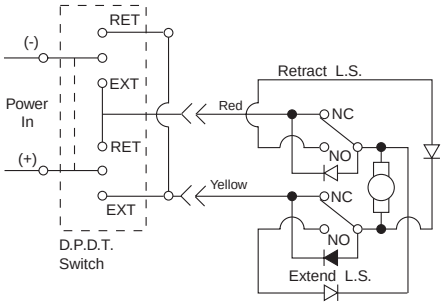

Metric Version

To extend the actuator, connect black to positive and red to negative. To retract the actuator, connect red to positive and black to negative.

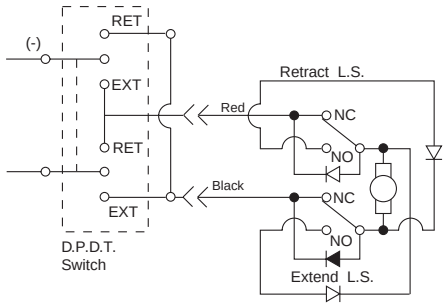

E150 Wiring

Without Limit Switches

To extend actuator, connect red to positive and yellow to negative. To retract actuator, connect red to negative and yellow to positive.

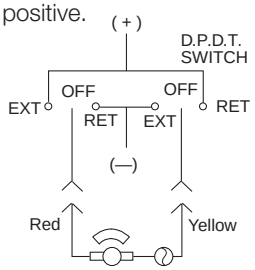

Metric

To extend actuator, connect red to positive and black to negative. To retract actuator, connect red to negative and black to positive.

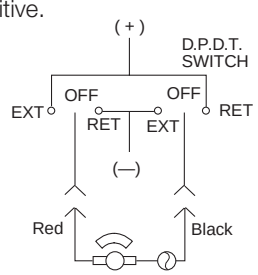

With Limit Switches

To extend actuator, connect red to positive and yellow to negative. To retract actuator, connect yellow to negative and blue to positive.

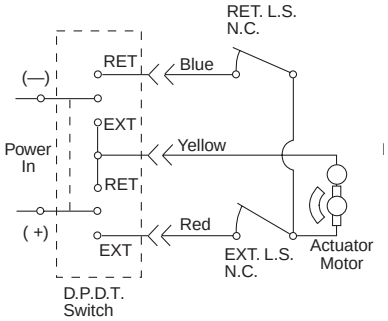

Metric

To extend actuator, connect red to positive and black to negative. To retract actuator, connect black to positive and blue to negative

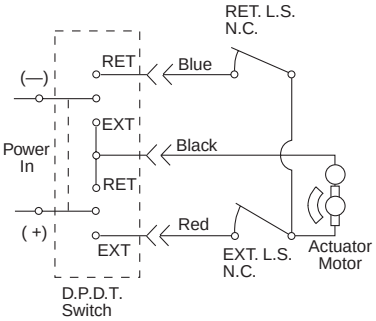

Potentiometer

Resistance measured across the white and blue leads will increase as the actuator extends and decrease as the actuator retracts. Resistance measured across the white and red leads will decrease as the actuator extends and increase as the actuator retracts.

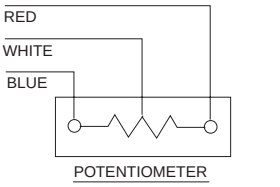

LOW LEVEL D.C. SIGNAL VOLTAGE

MCS-2005/MCS-2006

For Electrak 1 actuators

The MCS-2005 linear actuator control converts 120 VAC input current to 24 VDC output to operate an Electrak 1 actuator. This compact control is designed to operate one actuator and an auxiliary device such as a photoscanner simultaneously. The control has two outputs, a 24 VDC source controlled by the rocker switch on the cover and a second 24 VDC source which is unswitched. The source operated by the rocker switch is used when operation through the control is desired. The constant output source is used when a remote switch is to control the actuator. An auxiliary device, such as a photoelectric control which draws up to 200 mA may also be connected to the auxiliary output.

When the extend side of the rocker switch is pressed the actuator will begin to extend and will continue until either the switch is released or the actuator reaches the end of its stroke and the limit switch stops it. The actuator may be stopped by the control anywhere along the total stroke length but it must not be stalled in mid-stroke. A fused output protects the motor against overloads and stalling mid-stroke. Depressing the retract side of the rocker switch will cause the actuator to retract as long as the switch is held or until the actuator reaches the end of its stroke and the limit switch again stops it.

Features

- Standard 120 VAC input (MCS-2005)
- Standard 240 VAC input (MCS-2006)
- One 24 VDC actuator output for operation by front panel rocker switch
- One 24 VDC output for auxiliary device such as a photoelectric sensor
- Fused ratings – 1 Amp, 250 VAC (within control) – protects actuator in case of stalling caused by overload
- Compact size
- “Power On” light illuminates whenever power applied to the control
- Terminal strip for easy electrical connection
- Output filtered, but unregulated. Varies from 20-30 VDC, depending on input voltage. (2.8 amps rated continuous)

Wiring Connections

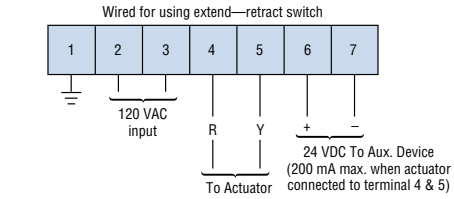

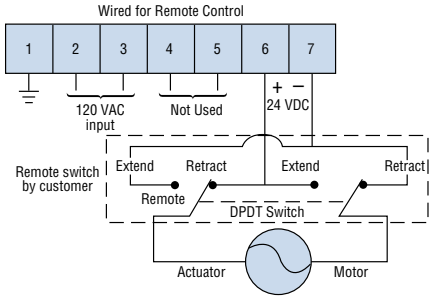

MCS-2007/MCS-2008

For Electrak 1 actuators with feedback

Compact control displays the feedback position on a digital LCD meter on the front cover. The control provides a 4-20 mA signal for a remote meter.

Extend and retract limit switches are set by adjusting two trim pots in the control.

Features

- Standard 120 VAC input (MCS-2007)
- Standard 240 VAC input (MCS-2008)
- One 24 VDC actuator output (2.8 amps rated continuous)
- Extend/retract switch
- Fuse protection
- Compact size
- 4-20 mA current loop for remote meter
- Dynamic braking
- LCD digital readout on front cover displays position feedback
- Extend/retract limit switches set by adjusting trim pots in control. Actuator need not be accessible to set limit switches.
- Accepts switch/inputs

Wiring Connections

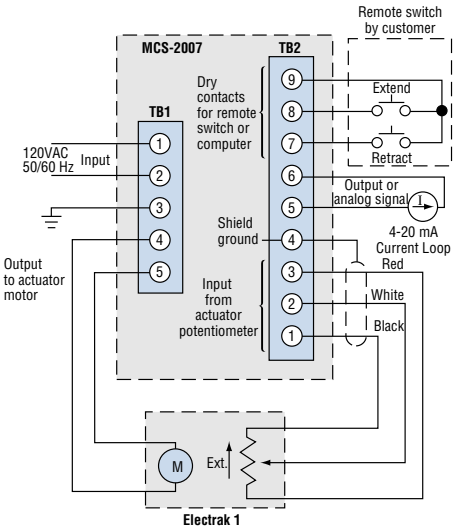

Actuator Controls

MCS-2015

For Electrak 1, 10, and 100

Common Features

- 115 VAC or 230 VAC input
- 24 VDC output to Electrak 1, 10 and 100 actuators
- 8 amps output continuous
- Dynamic braking
- Compatible with programmable controllers and Warner Electric Photoscanners
- Power on indicator
- Emergency stop/off pushbutton remains in position when activated
- NEMA 1 enclosure
- Accepts switch/inputs
- Provisions for 2 external limit switches or integral actuator limit switches

On-off power supply

The MCS-2015 is a basic power supply providing on-off and emergency stop functions.

Wiring Connections

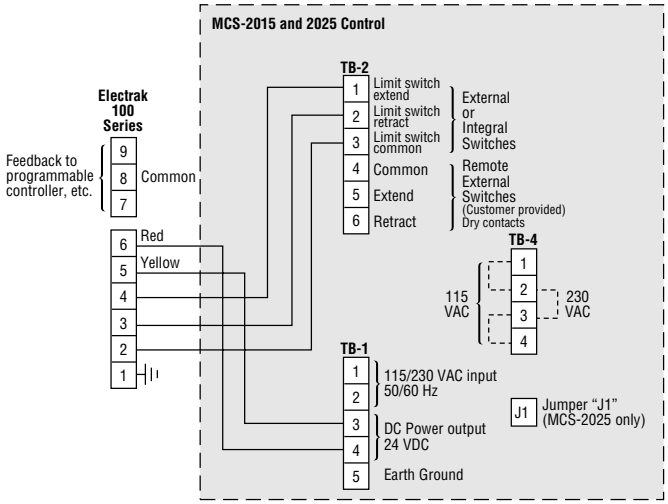

MCS-2025

For Electrak 1, 10, and 100

Combined control and power supply

The MCS-2025 intermediate control and power supply is equipped with cover mounted membrane switches and LED indicator lights for extend, retract, jog, run and remote control.

Additional features of the MCS-2025

- 8 amps output continuous
- Cover mounted membrane switches with LED indicator lights for extend, retract, jog, run and remote control
- Internal jumper for automatic return from end of stroke in run mode

Terminal Block Codes

Wiring to Electrak 1 Series

Wire Terminal Block 4 as shown. Connect the yellow lead from the actuator to terminal 4 of TB-1 and the red lead to terminal 3 of TB-1. TB-2 can be used for external switch connections. If limit switches are not used, terminals 1, 2 and 3 on TB-2 must be jumpered.

Wiring to Electrak 10 Series

Wire Terminal Blocks 1 and 4 as shown, TB-2 can be used for external limit switch connections. If limit switches are not used, terminals 1, 2 and 3 on TB-2 must be jumpered.

"Run" mode

Inserting jumper "J1" causes the actuator to reverse automatically upon reaching the extend limit switch. The actuator automatically retracts until reaching the other switch.

Remote control

When used with these controls a programmable controller, photoscanner or other such remote control device must have a minimum output rating of 24 VDC at 15 mA (MCS-2015 requires 48 VDC at 15 mA). The maximum saturation voltage of the remote control solid state output is 2 VDC. The maximum allowable leakage current of the remote control output is 2 mA.

MCS-2035

For Electrak 100 actuators with feedback

Positioning control and power supply

The MCS-2035 is an advanced control unit with cover mounted membrane switches for extend, retract, jog, run and remote control functions plus a percent of full stroke meter.

Features

- 115 VAC or 230 VAC input
- 24 VDC output to Electrak 100 actuators
- 8 amps output continuous
- Dynamic braking
- Compatible with programmable controllers and Warner Electric Photoscanners
- Power on indicator
- Emergency stop/off pushbutton remains in position when activated
- Cover mounted membrane switches with LED indicator lights for extend retract, jog, run and remote control
- NEMA 1 enclosure
- Accepts switch/inputs
- Internal jumper for automatic return from end of stroke in run mode
- Provisions for 2 external limit switches or integral actuator limit switches
- Percent of full stroke meter
- Receives potentiometer feedback from Electrak 100 actuators
- Output current loop (0-20 or 4-20 mA) for use with a remote meter

Terminal Block Codes

AC Line Voltage Selection

Jumper connections on TB-4 must be set for line voltage to be used. For 115 VAC, jumper terminals 1 to 2 and 3 to 4 on TB-4. For 230 VAC jumper terminals 2 to 3 only on TB-4. There are no external wiring connections to TB-4.

"Run" mode

Inserting jumper "J1" causes the actuator to reverse automatically upon reaching the extend limit switch. The actuator automatically retracts until reaching the other switch.

Remote control

When used with the MCS-2035 control, a programmable controller, photoscanner or similar remote control device must have a minimum output rating of 24 VDC at 15 mA. The maximum saturation voltage of the remote control solid state output is 2 VDC. The maximum allowable leakage current of the remote control output is 2 mA. The remote meter output loop is a 0-20 or 4-20 mA signal.

Wiring Connections

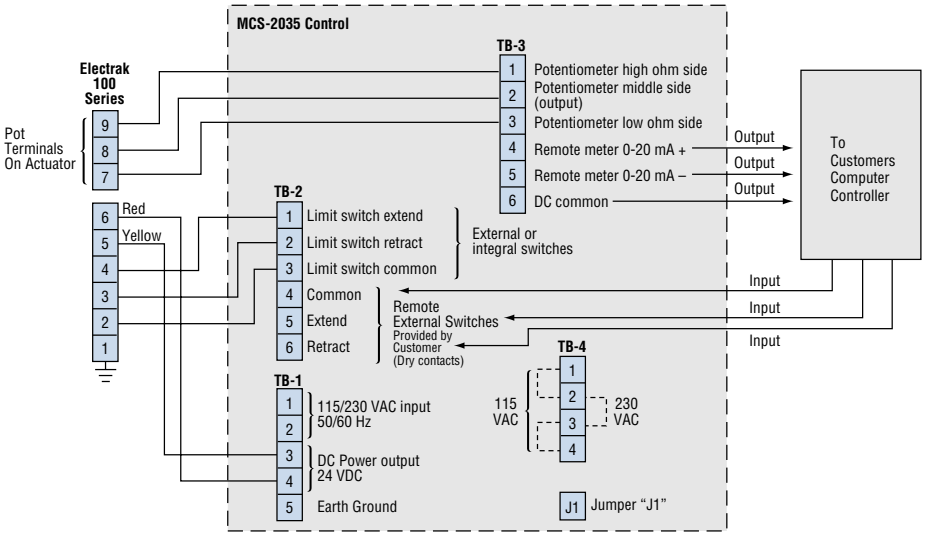

Actuator Controls

MCS-2041/2042

For Electrak 5 actuators

The MCS-2041 and 2042 linear actuator controls are specifically designed to operate Warner Electrak 5 linear actuators. These compact controls switch both the actuator motor and its anti-coast brake to provide optimum performance.

When the extend side of the rocker switch is pressed, the actuator will begin to extend and will continue until either the switch is released or the actuator reaches the end of its stroke and the ball detent clutch slips. Depressing the retract side of the rocker switch will cause the actuator to retract as long as the switch is held or until the actuator reaches the other end of its stroke. The ball detent clutch will also slip on overloads. The actuator's brake engages when the switch is released or in case of power failure.

Features

- 115 or 230 VAC versions
- 15 amps output continuous
- Rocker switch to control extend and retract movement
- "Power On " light illuminates whenever power applied to the control
- Fuse ratings
  MCS-2041 10Amps@250V
  MCS-2042 5 Amps@250V
- Prewired capacitor
- Terminal strip for easy field connections
- Compact size

Wiring Connections

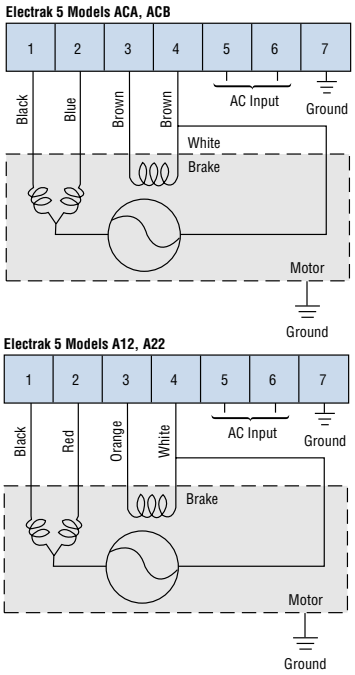

MCS-2051/2052

For Electrak 205 actuators with feedback

An advanced control unit for the new Electrak 205 actuator with a digital LCD meter to display the feedback position and a 4-20 mA output signal to operate a remote meter or provide an input to a programmable controller. Same membrane function switches as the MCS-2035.

Features

- 15 amps output continuous
- Compatible with programmable controllers and Warner Electric Photoscanners
- Power on indicator
- Emergency stop/off pushbutton remains in position when activated
- Cover mounted membrane switches with LED indicator lights for extend, retract, jog, run and remote control
- NEMA 1 enclosure
- Accepts switch/inputs
- Internal jumper for automatic return from end of stroke in run mode
- Provisions for 2 external limit switches or integral actuator limit switches
- LCD display for feedback position
- Receives potentiometer feedback from Electrak 205 actuators
- Output current loop (4-20mA) for use with remote meter

Remote control

When used with the MCS-2051 or MCS-2052 control, a programmable controller, photoscanner or similar remote control device must have a minimum output rating of 24 VDC at 15 mA. The maximum saturation voltage of the remote control solid state output is 2 VDC. The maximum allowable leakage current of the remote control output is 2 mA. The remote meter output loop is a 4-20 mA signal.

Wiring Connections

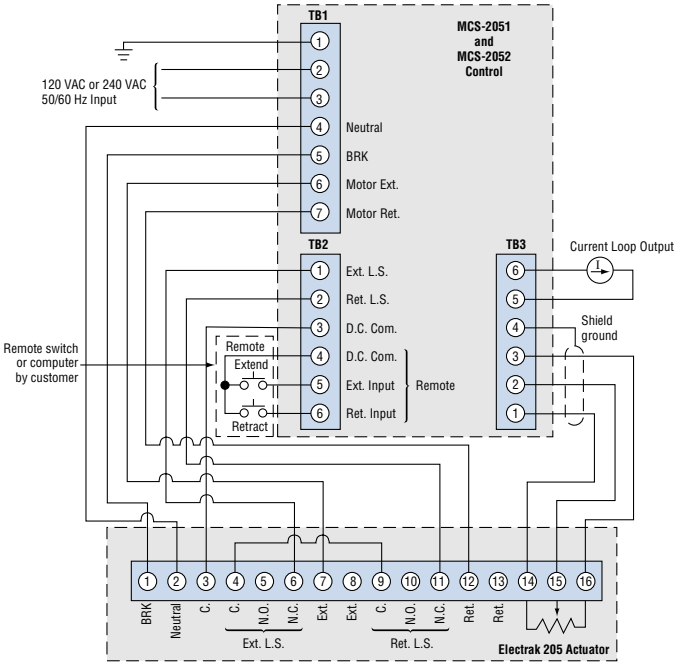

Dimensions ( ) denotes millimeters

Remote Switch (6932-101-059)

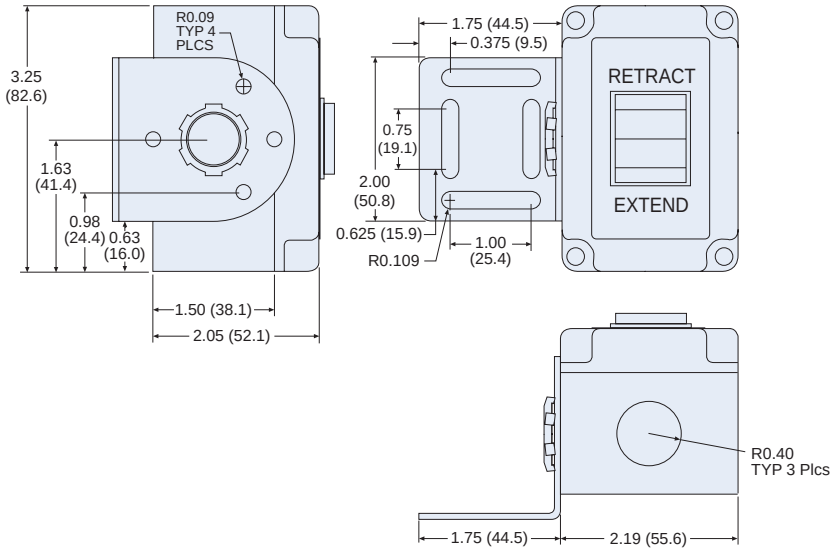

DE14/DF14

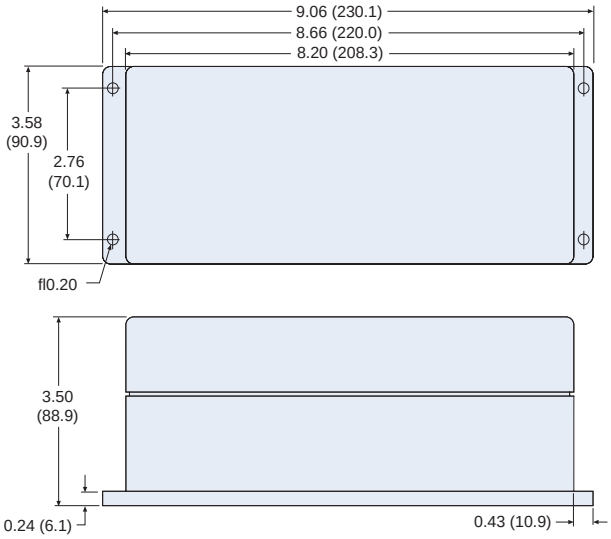

Dimensions ( ) denotes millimeters

MCS-2005/2006, MCS-2007/2008, MCS-2041/2041

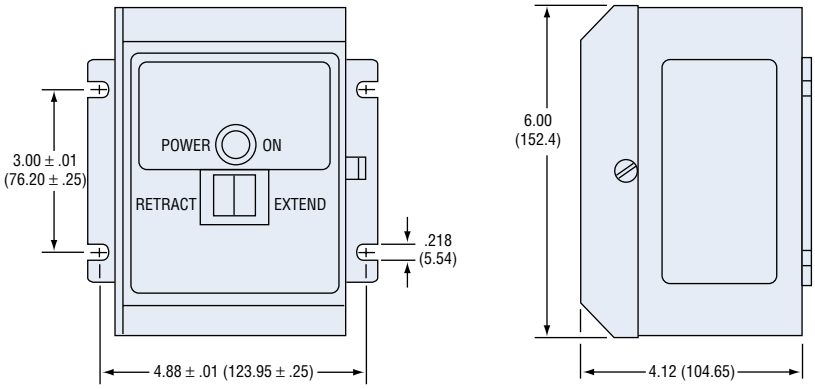

MCS-2015, MCS-2025, MCS-2035

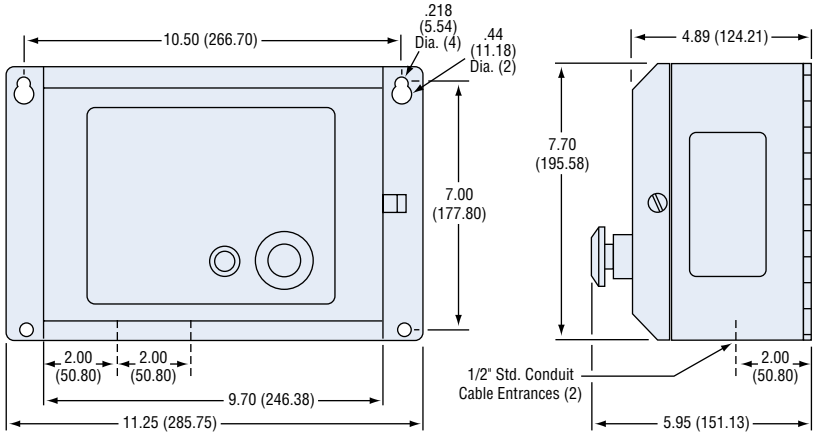

MCS-2051, MCS-2052

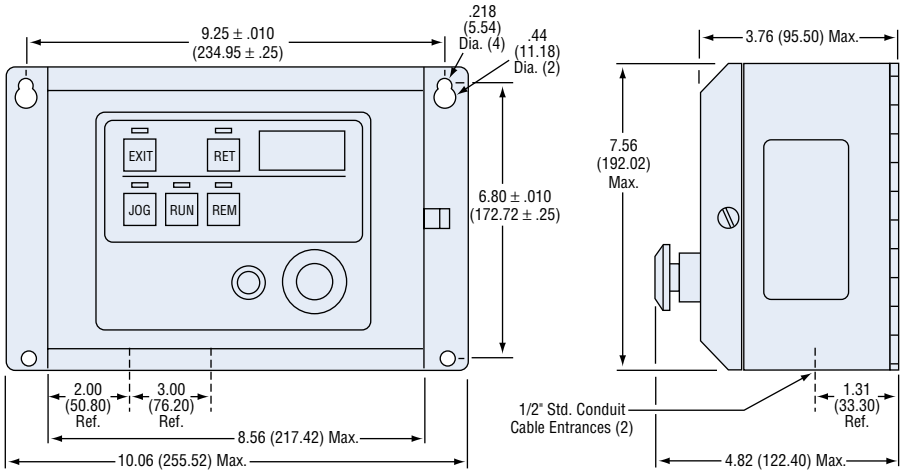

Design Considerations

Frequently asked questions about linear actuators . . .

1 **Question** What is duty cycle and what is its affect on the use of an actuator?

Answer

$$\text{Duty cycle} = \frac{\text{on time}}{\text{on time + off time}}$$

Example:

15 seconds on; 45 seconds off

$$= \frac{15 \text{ sec.}}{15 \text{ sec.} + 45 \text{ sec.}} = 25\%$$

The duty cycle is a function of load for DC actuators. The duty cycle charts for each actuator should be reviewed when lower loads and higher duty cycles are needed. All actuators have at least a 25% duty cycle at full rated load. Ambient temperatures above 77°F may affect the final rating.

2 **Question** Can two or more actuators be synchronized?

Answer No. Motor speed cannot be controlled with enough precision to ensure that the actuators will remain synchronized and a binding effect could take place.

3 **Question** What is the maximum extension speed of an Electrak actuator?

Answer The extension speed of an actuator is a function of the load. To determine the speed of an Electrak actuator at a given load, consult the speed/load charts. If a higher linear travel rate is required, simple mechanical linkages can be employed.

4 **Question** Can actuators operate above rated load?

Answer No, operation above rated load will adversely affect life.

5 **Question** When should an electric actuator be used instead of other linear motion devices?

Answer If the load, duty cycle and speed requirements are within the performance parameters of an actuator, an Electrak actuator is highly recommended. In contrast to other linear motion devices, an Electrak system has only two or three components, minimizing initial installation cost and eliminating maintenance. Electrak actuators will perform as new throughout their entire operational lifetime, will hold a load indefinitely without power, and can be directly interfaced to a programmable controller or other electronic control device.

6 **Question** Are actuators suitable for tough environments such as washdown areas or unheated warehouses?

Answer Yes. Warner linear actuators can operate in temperatures ranging from -15° to 150°F. DC actuators are suitable for washdown areas and have passed 96 hour salt spray tests. (Equivalent to 2 years in a seaside environment.) AC actuators are TENV construction and are suitable for damp, dirty and oily environments. They can also be used outdoors with a drip shield over the motor and proper grounding and ground fault protection.

7 **Question** Can actuators be side loaded?

Answer No. Through proper design practices, side loading of the actuator should be eliminated.

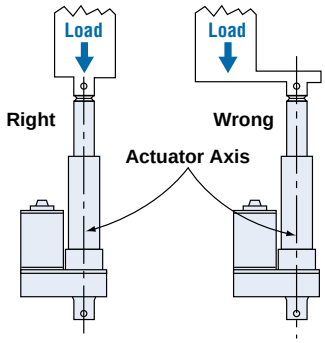

8 **Question** What is the typical life of an Electrak actuator?

Answer Life is a function of load and stroke length. The specific load/life charts for each actuator will provide a life estimate for your particular application.

9 **Question** Can I extend the life of the actuator?

Answer Using external limit switches to limit the stroke length instead of ratcheting the clutch will extend the life of the actuators without limit switches. Reducing the load on the actuator will also increase the life. Refer to the load/life charts for each actuator for more details.

10 **Question** Is it possible for a load to backdrive an Electrak actuator?

Answer No. Ball bearing screw models incorporate an anti-back driving holding brake and acme screw models are self locking due to friction in the screw mechanism.

11 **Question** How is a load prevented from coasting to a stop when the actuator is switched off?

Answer Electrak 5 and 205 actuators feature an anti-coast brake and the Electrak 1, 10 and 100 series actuators used in conjunction with MCS-2000 series controls are braked dynamically. Electrak 2 actuators may be dynamically braked by shorting the motor leads together after power is removed.

12 **Question** What does the slip clutch do?

Answer The clutch slips when a factory-set load limit is exceeded. This prevents the actuator from jamming at the end of stroke or stalling and overheating due to an overload.

Design Considerations

13 Question How much backlash do actuators have?

Answer Backlash or endplay values differ among the models of the Electrak series.

Electrak 1	.036 in.
Electrak 2	.080 in.
Electrak 5	.040 in.
Electrak 10	.040 in.
Electrak 050	.060 in.
Electrak 100	.035 in.
Electrak 150	.046 in.
Electrak 205	.015 in.

14 Question Are our controls programmable?

Answer Our controls are not programmable but they will provide input to and accept low voltage signals from a programmable controller to operate the actuator. Electrak 2000 controls are fully programmable. Ask for publication P-1023 for more details or contact your local Warner distributor or sales representative.

15 Question What special mounting consideration do actuators require?

Answer Only two – Electrak actuators must be mounted so they are not subject to side loading. Also the brackets and associated hardware must be able to withstand 20 in. lbs. of restraining torque for Electrak 1 series or 100 in. lbs. for Electrak 2, 5, 10, 100 and 205 series.

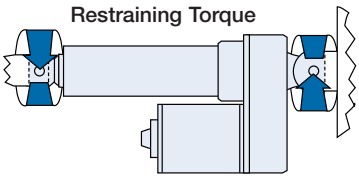

16 Question What's the difference between a tension and compression load?

Answer A tension load tries to stretch the actuator and a compression load tries to compress the actuator.

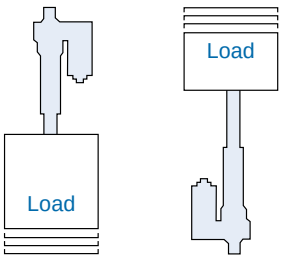

17 Question Are Warner linear actuators maintenance-free?

Answer Warner linear actuators never require lubrication, maintenance or adjustments for wear. The life of the Electrak 205 will be greatly extended by periodic lubrication using the grease fitting on the actuator. Lubrication is recommended for every 25,000 cycles.

18 Question Can actuators perform complex multi-positional linear motion functions?

Answer An Electrak actuator and control system, used in conjunction with a programmable controller, can be programmed to perform motion profiles within the limitations of the actuator's stroke length and duty cycle. Electrak 2000 controls are fully programmable. Ask for publication P-1023 for more details or contact your local Warner distributor or sales representative.

19 Question What are the most common reasons for premature actuator failure?

Answer Side loading due to incorrect mounting, shock loading, incorrect wiring, and exceeding the maximum duty cycle are the most prominent causes for premature failure.

20 Question Why do our DC actuators not have a UL label?

Answer DC actuators do not need UL approval because of the low voltage involved.

21 Question What is the Electrak 100 and Electrak 205 resolution using the potentiometer and what does backlash do to resolution?

Answer Under an unidirectional load (vertical) backlash does not affect resolution. Under a bidirectional load the backlash must be added to the resolution of the potentiometer.

Resolution	Unidirectional	Bidirectional Load (Resolution & Backlash)
Electrak 100	± .0035"	± .025" (for 24" stroke)
Electrak 205	± .0025"	± .010" (for 24" stroke)

22 Question How can I slow the actuator down?

Answer The DC actuators can be run at reduced voltage (up to half voltage) to reduce the speed and still achieve the performance specs in the catalog.

23 Question Can the actuator's positioning capability be improved?

Answer Running the actuator at a slower speed will allow better control of the actuator and improve positioning capability.

24 Question Can an MCS-2000 series control operate more than one actuator?

Answer For the control to operate more than one actuator simultaneously, the combined current draw of the actuators must not exceed the maximum rated current output of the control. One set of limit switches will limit the stroke of all actuators connected to the control.

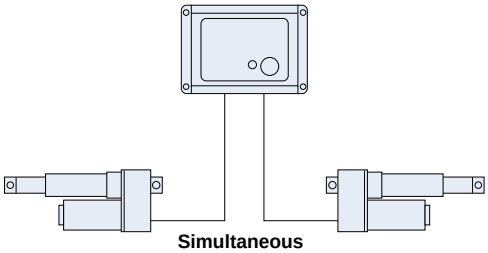

Simultaneous

AC Actuators

Warner Linear recommends using 16 gauge wire for applications with distances up to 20 feet from power source to actuator for AC units. For distances ranging from 20 to 60 feet, 14 gauge wire is recommended.

Connection

AC actuator motor leads are pre-stripped for installation convenience.

Mounting

Warner linear actuators are quickly and easily mounted by slipping pins through the holes on each end of the unit and into brackets on the machine frame and the load. Electrak 100 units must be mounted by the cover tube and a swivel rod end. The Electrak 205 can be mounted by either the rear clevis or by a tube mount.

Half inch diameter solid pins (1/4" solid pins for Electrak 1) provide maximum holding strength and a retaining or cotter pin on each end will prevent the solid pin from falling out of its mounting bracket. Roll or spring type mounting pins should be avoided.

The mounting pins must be parallel to each other as shown below. Pins which are not parallel may cause the actuator to bind.

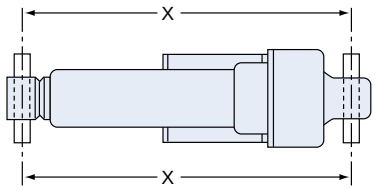

The load should act along the axis of the actuator since off center loads may cause binding.

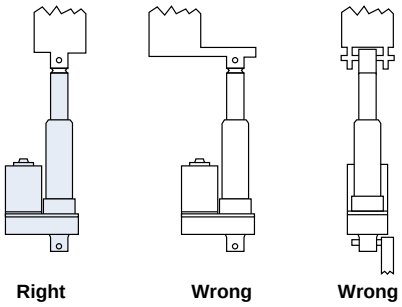

The actuator mounting brackets must be able to withstand the torque which is developed when the unit extends or retracts. Restraining torque required varies with the model being used.

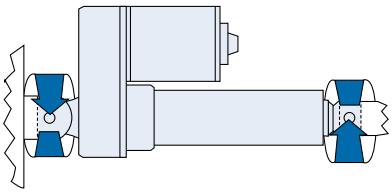

Actuator	Torque Required in. lbs.
Electrak 1	20
All other Electrak Actuators	100

Synchronization

Using two or more actuators together to move the same load is not recommended. Normal tolerances in motor specifications can cause one actuator to run faster than the other, causing binding.

Connectors

Electrak 1

Packard Electric Pack-Con male 8911773 with terminal 6294511. Mating connector Pack-Con 8911772 with terminal 8911639. (Warner part no. for mating connector is 9300-448-001.)

Electrak 2 and 10

Packard Electric connector 56 series no. 2984883 and terminal no. 2962987. Male blade provided on DC actuators. Mating connectors are Packard 56 series connector body no. 2973781 with terminal 2962573. (Warner part no. for mating connector is 9100-448-001.)

Duty Cycle

All Warner linear actuators are designed for intermittent operation. Continuous cycling is to be avoided. All Electrak actuators are capable of operating at rated load with a duty cycle of 25% “on” time. Exceeding these recommended duty cycles will cause the motor thermal protectors to automatically stop the actuator. After the motor has cooled the thermal protector will reset automatically. Repeated overloads will shorten the life of the actuator. Electrak 1 actuators have no thermal protectors. Overheating the motor will shorten the useful life.

Holding Brakes

The Electrak 1, 2, 050 and 150 incorporate an acme screw which is inherently self-locking while Electrak 5, 10, 100 and 205 actuators have a ball bearing screw drive incorporating a special anti-backdriving brake. In addition, the Electrak 5 and 205 employ a coast limiting electromechanical brake which is automatically operated.

Electrak 1, 2, 5, 10, 050, 100, 150 Remote Switches

Actuators require double-pole double-throw switches. McGill switch no. 0121-004, Cutler-Hammer switch no. 8835-K4, or equivalent are recommended and are usually available locally. The required switch can be purchased from Warner Electric under part number 830-8004-016. Here are required switch parameters.

- Double-pole, double-throw
- 15 Amp at 270 VAC
- Lever seal to keep out dirt and moisture
- Center “off”
- Two momentary contacts
- 15/32" bushing
- Screw terminals

Temperature Range

All Electrak actuators are operable at temperatures ranging from -15° to 150° F.

Capacitors

Warner Electrak 5 and 205 actuators use permanent split capacitor motors which require a capacitor for successful operation. The capacitor is installed across the red/black (ext/retract) leads.

See pages 21 and 27 for the proper capacitor for each actuator and voltage.

Technical Data

Wire Gauge Selection

DC Actuators

Long lead wires between the power source and the actuator will result in a voltage drop for DC units. This voltage drop can be avoided by sizing the wires in accordance with the following wire gauge selection chart, which is based on a 24 VDC power source. In order to use the chart, find the point of intersection of the two known factors, such as amperage and distance, and read the required wire gauge from the curves on the chart. Example: A D24-05B5 actuator draws 14 amps current at rated load. The intersection of the maximum current and the distance between the actuator and power source (44 feet, for example) indicates the wire gauge required (#12).

Wiring

Warner linear actuators should be connected in accordance with the wiring diagram shown to the right.

Wire Gauge Selection Chart

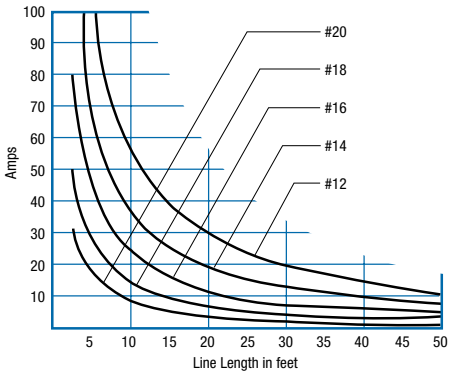

Overload Clutch

Electrak 2, 5, 10, 050 and 100 series linear actuators are protected by a load limiting clutch which prevents the motor from stalling at either end of the actuator stroke. It will also slip when the factory-set load limit is exceeded. The clutch is a ball detent design, assuring a consistent slip point and long life.

Limit Switches

Electrak 1, 050, 100, 150 and 205 actuators are provided with electrical end of stroke shut-off. Electrak 1 with feedback must be used with the MCS-2007 control for end of stroke shut-off.

Electrak 1

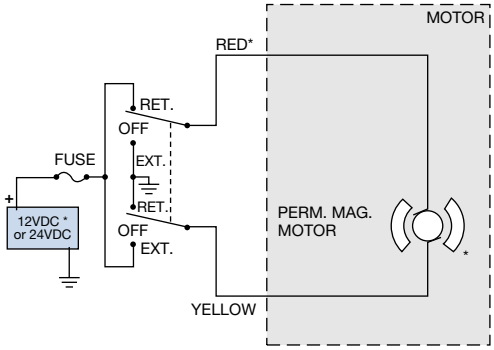

*Note: Red for Electrak 1
White for 12VDC Electrak 1 with Feedback
Black for 24VDC Electrak 1 with Feedback

Electrak 5 (A12-A22 Series)

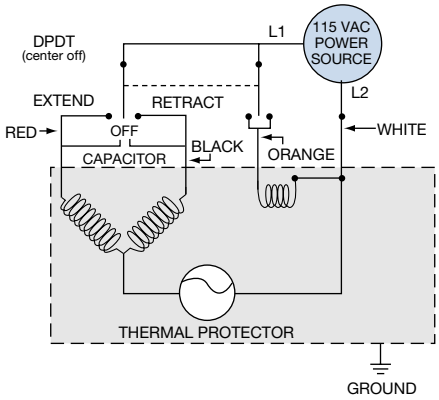

Electrak 2, 10, 100

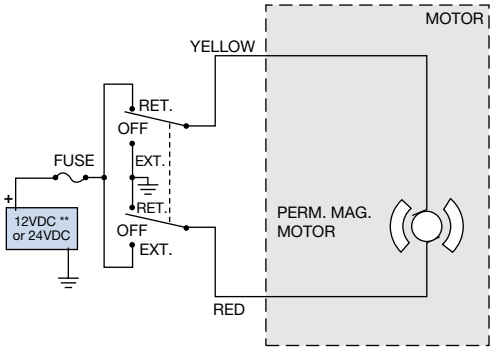

**Note: Electrak 2 is 12VDC only

Electrak 205

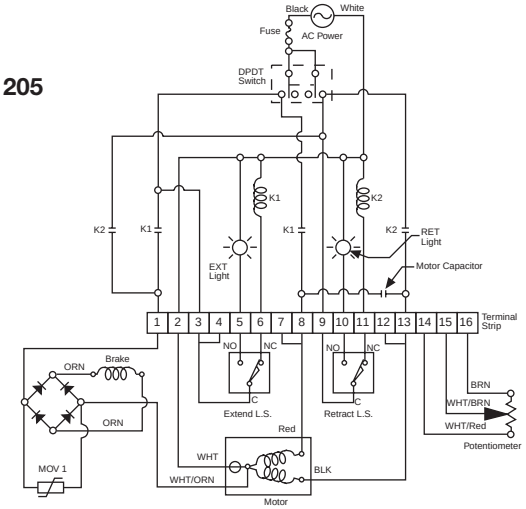

Application Data Form Fax: 800-888-4944

Mail or Fax to:

Warner Electric, Inc.
Application Engineering
449 Gardner Street, South Beloit, Illinois 61080
Phone number: 800-825-9050 • Fax number: 800-888-4944

Date _____

Company _____

Address _____

City_____State_____Zip _____

Name _____

Title_____Phone (_____) _____

Basic Application

Load _____ lbs.

Side load _____ lbs.

Speed _____ inches per second

Duty cycle _____ % of time running versus time still

Stroke length _____ inches

Life _____ inches or cycles

Environmental ☐ Clean ☐ Damp ☐ Oil splash ☐ Outdoors

Power available _____VAC _____VDC

Quantity _____

Drawing of application