Modicon M221 Logic Controller

Hardware Guide

04/2014

EIO0000001384.01

www.schneider-electric.com

Schneider Electric

The information provided in this documentation contains general descriptions and/or technical characteristics of the performance of the products contained herein. This documentation is not intended as a substitute for and is not to be used for determining suitability or reliability of these products for specific user applications. It is the duty of any such user or integrator to perform the appropriate and complete risk analysis, evaluation and testing of the products with respect to the relevant specific application or use thereof. Neither Schneider Electric nor any of its affiliates or subsidiaries shall be responsible or liable for misuse of the information contained herein. If you have any suggestions for improvements or amendments or have found errors in this publication, please notify us.

No part of this document may be reproduced in any form or by any means, electronic or mechanical, including photocopying, without express written permission of Schneider Electric.

All pertinent state, regional, and local safety regulations must be observed when installing and using this product. For reasons of safety and to help ensure compliance with documented system data, only the manufacturer should perform repairs to components.

When devices are used for applications with technical safety requirements, the relevant instructions must be followed.

Failure to use Schneider Electric software or approved software with our hardware products may result in injury, harm, or improper operating results.

Failure to observe this information can result in injury or equipment damage.

© 2014 Schneider Electric. All rights reserved.

Table of Contents

	Safety Information	**7**
	About the Book	**9**
Part I	**Modicon M221 Logic Controller Introduction**	**13**
Chapter 1	**M221 General Overview**	**15**
	TM221C Logic Controller Description	**16**
	TM221M Logic Controller Description	**20**
	Maximum Hardware Configuration	**24**
	TMC2 Cartridges	**28**
	TM3 Expansion Modules	**30**
	TM2 Expansion Modules	**37**
	Accessories	**41**
Chapter 2	**M221 Features**	**47**
	Real Time Clock (RTC)	**48**
	Input Management	**55**
	Output Management	**57**
	Run/Stop	**60**
	SD Card	**62**
Chapter 3	**M221 Installation**	**67**
3.1	M221 Logic Controller General Rules for Implementing	**68**
	Environmental Characteristics	**69**
	Certifications and Standards	**72**
3.2	M221 Logic Controller Installation	**73**
	Installation and Maintenance Requirements	**74**
	TM221C Logic Controller Mounting Positions and Clearances	**77**
	TM221M Logic Controller Mounting Positions and Clearances	**80**
	Top Hat Section Rail (DIN rail)	**83**
	Installing and Removing the Controller with Expansions	**86**
	Direct Mounting on a Panel Surface	**89**
3.3	M221 Electrical Requirements	**91**
	Wiring Best Practices	**92**
	DC Power Supply Characteristics and Wiring	**98**
	AC Power Supply Characteristics and Wiring	**102**
	Grounding the M221 System	**105**

Part II Modicon TM221C Logic Controller 109
Chapter 4 TM221C16R 111
TM221C16R Presentation 111
Chapter 5 TM221CE16R 115
TM221CE16R Presentation 115
Chapter 6 TM221C16T 119
TM221C16T Presentation 119
Chapter 7 TM221CE16T 123
TM221CE16T Presentation 123
Chapter 8 TM221C24R 127
TM221C24R Presentation 127
Chapter 9 TM221CE24R 131
TM221CE24R Presentation 131
Chapter 10 TM221C24T 135
TM221C24T Presentation 135
Chapter 11 TM221CE24T 139
TM221CE24T Presentation 139
Chapter 12 TM221C40R 143
TM221C40R Presentation 143
Chapter 13 TM221CE40R 149
TM221CE40R Presentation 149
Chapter 14 TM221C40T 155
TM221C40T Presentation 155
Chapter 15 TM221CE40T 161
TM221CE40T Presentation 161
Chapter 16 Embedded I/O Channels 167
Digital Inputs 168
Relay Outputs 181
Regular and Fast Transistor Outputs 187
Analog Inputs 195
Part III Modicon TM221M Logic Controller 199
Chapter 17 TM221M16R / TM221M16RG 201
TM221M16R / TM221M16RG Presentation 202
TM221M16R / TM221M16RG Digital Inputs 206
TM221M16R / TM221M16RG Digital Outputs 210
TM221M16R / TM221M16RG Analog Inputs 214

Chapter 18 TM221ME16R / TM221ME16RG 219
TM221ME16R / TM221ME16RG Presentation 220
TM221ME16R / TM221ME16RG Digital Inputs. 224
TM221ME16R / TM221ME16RG Digital Outputs 228
TM221ME16R / TM221ME16RG Analog Inputs 232
Chapter 19 TM221M16T / TM221M16TG. 237
TM221M16T / TM221M16TG Presentation. 238
TM221M16T / TM221M16TG Digital Inputs 242
TM221M16T / TM221M16TG Digital Outputs 247
TM221M16T / TM221M16TG Analog Inputs 252
Chapter 20 TM221ME16T / TM221ME16TG 257
TM221ME16T / TM221ME16TG Presentation 258
TM221ME16T / TM221ME16TG Digital Inputs 263
TM221ME16T / TM221ME16TG Digital Outputs. 268
TM221ME16T / TM221ME16TG Analog Inputs 273
Chapter 21 TM221M32TK. 277
TM221M32TK Presentation. 278
TM221M32TK Digital Inputs 282
TM221M32TK Digital Outputs 289
TM221M32TK Analog Inputs. 296
Chapter 22 TM221ME32TK 301
TM221ME32TK Presentation 302
TM221ME32TK Digital Inputs 306
TM221ME32TK Digital Outputs. 313
TM221ME32TK Analog Inputs 321
Part IV Modicon M221 Logic Controller Communication 325
Chapter 23 Integrated Communication Ports 327
USB Mini-B Programming Port 328
Ethernet Port 330
Serial Line 1 333
Serial Line 2. 337
Chapter 24 Connecting the M221 Logic Controller to a PC 341
Connecting the Controller to a PC. 341
Glossary 345
Index 349

Safety Information

Important Information

NOTICE

Read these instructions carefully, and look at the equipment to become familiar with the device before trying to install, operate, or maintain it. The following special messages may appear throughout this documentation or on the equipment to warn of potential hazards or to call attention to information that clarifies or simplifies a procedure.

The addition of this symbol to a Danger safety label indicates that an electrical hazard exists, which will result in personal injury if the instructions are not followed.

This is the safety alert symbol. It is used to alert you to potential personal injury hazards. Obey all safety messages that follow this symbol to avoid possible injury or death.

DANGER

DANGER indicates an imminently hazardous situation which, if not avoided, **will result in** death or serious injury.

WARNING

WARNING indicates a potentially hazardous situation which, if not avoided, **can result in** death or serious injury.

CAUTION

CAUTION indicates a potentially hazardous situation which, if not avoided, **can result in** minor or moderate injury.

NOTICE

NOTICE is used to address practices not related to physical injury.

PLEASE NOTE

Electrical equipment should be installed, operated, serviced, and maintained only by qualified personnel. No responsibility is assumed by Schneider Electric for any consequences arising out of the use of this material.

A qualified person is one who has skills and knowledge related to the construction and operation of electrical equipment and its installation, and has received safety training to recognize and avoid the hazards involved.

About the Book

At a Glance

Document Scope

Use this document to:

- Install and operate your M221 Logic Controller.
- Connect the M221 Logic Controller to a programming device equipped with SoMachine Basic software.
- Interface the M221 Logic Controller with I/O expansion modules, HMI and other devices.
- Familiarize yourself with the M221 Logic Controller features.

NOTE: Read and understand this document and all related documents before installing, operating, or maintaining your controller.

Validity Note

This document has been updated with the release of SoMachine Basic V1.1.

The technical characteristics of the devices described in this manual also appear online.

The characteristics that are presented in this manual should be the same as those characteristics that appear online. In line with our policy of constant improvement, we may revise content over time to improve clarity and accuracy. If you see a difference between the manual and online information, use the online information as your reference.

Related Documents

Title of Documentation	Reference Number
Modicon M221 Logic Controller - Programming Guide	EIO0000001360 (ENG), EIO0000001361 (FRE), EIO0000001362 (GER), EIO0000001363 (SPA), EIO0000001364 (ITA), EIO0000001365 (CHS), EIO0000001369 (TUR), EIO0000001368 (POR)

Title of Documentation	Reference Number
Modicon TMC2 Cartridges - Hardware Guide	EIO0000001768 (ENG), EIO0000001769 (FRE), EIO0000001770 (GER), EIO0000001771 (SPA), EIO0000001772 (ITA), EIO0000001773 (CHS), EIO0000001775 (TUR), EIO0000001774 (POR)
Modicon TM3 Digital I/O Modules - Hardware Guide	EIO0000001408 (ENG), EIO0000001409 (FRE), EIO0000001410 (GER), EIO0000001411 (SPA), EIO0000001412 (ITA), EIO0000001413 (CHS), EIO0000001377 (TUR), EIO0000001376(POR)
Modicon TM3 Analog I/O Modules - Hardware Guide	EIO0000001414 (ENG), EIO0000001415 (FRE), EIO0000001416 (GER), EIO0000001417 (SPA), EIO0000001418 (ITA), EIO0000001419 (CHS), EIO0000001379 (TUR), EIO0000001378 (POR)
Modicon TM3 Expert I/O Modules - Hardware Guide	EIO0000001420 (ENG), EIO0000001421 (FRE), EIO0000001422 (GER), EIO0000001423 (SPA), EIO0000001424 (ITA), EIO0000001425 (CHS), EIO0000001380 (TUR), EIO0000001381 (POR)
Modicon TM3 Transmitter and Receiver Modules - Hardware Guide	EIO0000001426 (ENG), EIO0000001427 (FRE), EIO0000001428 (GER), EIO0000001429 (SPA), EIO0000001430 (ITA), EIO0000001431 (CHS), EIO0000001382 (TUR), EIO0000001383 (POR)

Title of Documentation	Reference Number
TM221C DC Logic Controller - Instruction Sheet	EAV48550
TM221C AC Logic Controller - Instruction Sheet	EAV58623
TM221M Logic Controller - Instruction Sheet	HRB59602

You can download these technical publications and other technical information from our website at www.schneider-electric.com.

Product Related Information

DANGER

HAZARD OF ELECTRIC SHOCK, EXPLOSION OR ARC FLASH

- Disconnect all power from all equipment including connected devices prior to removing any covers or doors, or installing or removing any accessories, hardware, cables, or wires except under the specific conditions specified in the appropriate hardware guide for this equipment.
- Always use a properly rated voltage sensing device to confirm the power is off where and when indicated.
- Replace and secure all covers, accessories, hardware, cables, and wires and confirm that a proper ground connection exists before applying power to the unit.
- Use only the specified voltage when operating this equipment and any associated products.

Failure to follow these instructions will result in death or serious injury.

This equipment has been designed to operate outside of any hazardous location. Only install this equipment in zones known to be free of a hazardous atmosphere.

DANGER

POTENTIAL FOR EXPLOSION

Install and use this equipment in non-hazardous locations only.

Failure to follow these instructions will result in death or serious injury.

[1] For additional information, refer to NEMA ICS 1.1 (latest edition), "Safety Guidelines for the Application, Installation, and Maintenance of Solid State Control" and to NEMA ICS 7.1 (latest edition), "Safety Standards for Construction and Gu

Part I
Modicon M221 Logic Controller Introduction

What Is in This Part?

This part contains the following chapters:

Chapter	Chapter Name	Page
1	M221 General Overview	15
2	M221 Features	47
3	M221 Installation	67

Chapter 1
M221 General Overview

Overview

This chapter provides general information about the M221 Logic Controller system architecture and its components.

What Is in This Chapter?

This chapter contains the following topics:

Topic	Page
TM221C Logic Controller Description	16
TM221M Logic Controller Description	20
Maximum Hardware Configuration	24
TMC2 Cartridges	28
TM3 Expansion Modules	30
TM2 Expansion Modules	37
Accessories	41

TM221C Logic Controller Description

Overview

The TM221C Logic Controller has various powerful features and can service a wide range of applications.

Software configuration, programming, and commissioning are accomplished with the SoMachine Basic software described in the SoMachine Basic Operating Guide *(see SoMachine Basic, Operating Guide)* and the M221 Logic Controller - Programming Guide.

Programming Languages

The M221 Logic Controller is configured and programmed with the SoMachine Basic software, which supports the following IEC 61131-3 programming languages:

- IL: Instruction List
- LD: Ladder Diagram
- Grafcet (List)

Power Supply

The power supply of the TM221C Logic Controller is 24 Vdc *(see page 98)* or 100...240 Vac *(see page 102)*.

Real Time Clock

The M221 Logic Controller includes a Real Time Clock (RTC) system *(see page 48)*.

Run/Stop

The M221 Logic Controller can be operated externally by the following:

- a hardware Run/Stop switch *(see page 60)*
- a Run/Stop *(see page 60)* operation by a dedicated digital input, defined in the software configuration (for more information, refer to Configuring Digital Inputs.)
- SoMachine Basic software (for more information, refer to Toolbar *(see SoMachine Basic, Operating Guide)*).

Memory

This table describes the different types of memory:

Memory Type	Size	Used to
RAM	512 Kbyte, of which 256 Kbyte available for the application.	execute the application and contain data
Flash	1.5 Mbyte, of which 256 Kbyte is used to backup the user application and data in case of power outage.	save the application

Embedded Inputs/Outputs

The following embedded I/O types are available, depending on the controller reference:
- Regular inputs
- Fast inputs associated with counters
- Regular sink/source transistor outputs
- Fast sink/source transistor outputs associated with pulse generators
- Relay outputs
- Analog inputs
- Analog outputs

Removable Storage

The M221 Logic Controllers include an embedded SD card slot *(see page 62)*.

The main uses of the SD card are:
- Initializing the controller with a new application
- Updating the controller firmware

Embedded Communication Features

The following types of communication ports are available depending on the controller reference:
- Ethernet *(see page 330)*
- USB Mini-B *(see page 328)*
- Serial Line 1 *(see page 333)*

TM221C Logic Controllers

Reference	Digital Inputs	Digital Outputs	Analog Inputs	Communication Ports	Power Supply
TM221C16R	5 regular inputs(1) 4 fast inputs (HSC)(2)	7 relay outputs	Yes	1 serial line port 1 USB programming port	100...240 Vac
TM221CE16R			Yes	1 serial line port 1 USB programming port 1 Ethernet port	

NOTE: All TM221C Logic Controller logic controllers use removable screw terminal blocks.

(1) The regular inputs have a maximum frequency of 5 kHz.
(2) The fast inputs can be used either as regular inputs or as fast inputs for counting or event functions.
(3) The fast transistor outputs can be used either as regular transistor outputs, or for PWM, PLS functions, or reflex outputs for HSC.

Reference	Digital Inputs	Digital Outputs	Analog Inputs	Communication Ports	Power Supply
TM221C16T	5 regular inputs(1) 4 fast inputs (HSC)(2)	Source outputs 5 regular transistor outputs 2 fast outputs (PWM/PLS)(3)	Yes	1 serial line port 1 USB programming port	24 Vdc
TM221CE16T			Yes	1 serial line port 1 USB programming port 1 Ethernet port	
TM221C24R	10 regular inputs(1) 4 fast inputs (HSC)(2)	10 relay outputs	Yes	1 serial line port 1 USB programming port	100...240 Vac
TM221CE24R			Yes	1 serial line port 1 USB programming port 1 Ethernet port	
TM221C24T		Source outputs 8 regular transistor outputs 2 fast outputs (PWM/PLS)(3)	Yes	1 serial line port 1 USB programming port	24 Vdc
TM221CE24T			Yes	1 serial line port 1 USB programming port 1 Ethernet port	
TM221C40R	20 regular inputs(1) 4 fast inputs (HSC)(2)	16 relay outputs	Yes	1 serial line port 1 USB programming port	100...240 Vac
TM221CE40R			Yes	1 serial line port 1 USB programming port 1 Ethernet port	
TM221C40T		Source outputs 14 regular transistor outputs 2 fast outputs (PWM/PLS)(3)	Yes	1 serial line port 1 USB programming port	24 Vdc
TM221CE40T			Yes	1 serial line port 1 USB programming port 1 Ethernet port	

NOTE: All TM221C Logic Controller logic controllers use removable screw terminal blocks.

(1) The regular inputs have a maximum frequency of 5 kHz.
(2) The fast inputs can be used either as regular inputs or as fast inputs for counting or event functions.
(3) The fast transistor outputs can be used either as regular transistor outputs, or for PWM, PLS functions, or reflex outputs for HSC.

Delivery Content

The following figure shows the content of the delivery for a TM221C Logic Controller:

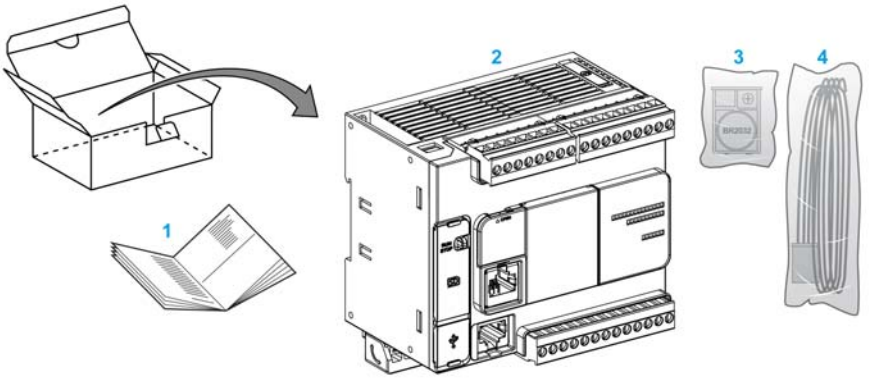

1 TM221C Logic Controller Instruction Sheet
2 TM221C Logic Controller
3 Battery holder with lithium carbon monofluoride battery, type Panasonic BR2032.
4 Analog cable

TM221M Logic Controller Description

Overview

The TM221M Logic Controller has various powerful features and can service a wide range of applications.

Hardware configuration, programming, and commissioning are accomplished with the SoMachine Basic software described in the SoMachine Basic - Operating Guide.

Programming Languages

The M221 Logic Controller is configured and programmed with the SoMachine Basic software, which supports the following IEC 61131-3 programming languages:

- IL: Instruction List
- LD: Ladder Diagram
- Grafcet (List)

Power Supply

The power supply of the TM221M Logic Controller is 24 Vdc *(see page 98)*.

Real Time Clock

The M221 Logic Controller includes a Real Time Clock (RTC) system *(see page 48)*.

Run/Stop

The M221 Logic Controller can be operated externally by the following:

- a hardware Run/Stop switch *(see page 60)*
- a Run/Stop operation by a dedicated digital input, defined in the software configuration (for more information, refer to Configuring Digital Inputs *(see Modicon M221, Logic Controller, Programming Guide)*)
- SoMachine Basic software (for more information, refer to Toolbar *(see SoMachine Basic, Operating Guide)*).

Memory

This table describes the different types of memory:

Memory Type	Size	Used to
RAM	512 Kbyte, of which 256 Kbyte available for the application.	execute the application and contains data
Flash	1.5 Mbyte, of which 256 Kbyte is used to backup the user application and data in case of power outage.	save the application

Embedded Inputs/Outputs

The following embedded I/O types are available, depending on the controller reference:

- Regular inputs
- Fast inputs (HSC)
- Regular transistor outputs
- Fast transistor outputs (PWM/PLS)
- Relay outputs
- Analog inputs
- Analog outputs

Embedded Communication Features

The following communication ports are available on the front panel of the controller, depending on the controller reference:

- Ethernet *(see page 330)*
- USB Mini-B *(see page 328)*
- SD Card *(see page 62)*
- Serial Line 1 *(see page 333)*
- Serial Line 2 *(see page 337)*

TM221M Logic Controllers

Reference	Digital Input	Digital Output	Analog Input	Communication Port	Terminal Type
TM221M16R *(see page 201)*	4 regular inputs(1) 4 fast inputs (HSC)(2)	8 relay outputs	Yes	2 serial line ports 1 USB programming port	Removable screw terminal blocks
TM221M16RG *(see page 201)*	4 regular inputs(1) 4 fast inputs (HSC)(2)	8 relay outputs	Yes	2 serial line ports 1 USB programming port	Removable spring terminal blocks
TM221ME16R *(see page 219)*	4 regular inputs(1) 4 fast inputs (HSC)(2)	8 relay outputs	Yes	1 serial line port 1 USB programming port 1 Ethernet port	Removable screw terminal blocks
TM221ME16RG *(see page 219)*	4 regular inputs(1) 4 fast inputs (HSC)(2)	8 relay outputs	Yes	1 serial line port 1 USB programming port 1 Ethernet port	Removable spring terminal blocks

(1) The regular inputs have a maximum frequency of 5 kHz.
(2) The fast inputs can be used either as regular inputs or as fast inputs for counting or event functions.
(3) The fast transistor outputs can be used as regular transistor outputs, or for PWM, PLS functions, or reflex outputs for HSC.

Reference	Digital Input	Digital Output	Analog Input	Communication Port	Terminal Type
TM221M16T *(see page 237)*	4 regular inputs(1) 4 fast inputs (HSC)(2)	6 regular transistor outputs 2 fast transistor outputs (PWM/PLS)(3)	Yes	2 serial line ports 1 USB programming port	Removable screw terminal blocks
TM221M16TG *(see page 237)*	4 regular inputs(1) 4 fast inputs (HSC)(2)	6 regular transistor outputs 2 fast transistor outputs (PWM/PLS)(3)	Yes	2 serial line ports 1 USB programming port	Removable spring terminal blocks
TM221ME16T *(see page 257)*	4 regular inputs(1) 4 fast inputs (HSC)(2)	6 regular transistor outputs 2 fast transistor outputs (PWM/PLS)(3)	Yes	1 serial line port 1 USB programming port 1 Ethernet port	Removable screw terminal blocks
TM221ME16TG *(see page 257)*	4 regular inputs(1) 4 fast inputs (HSC)(2)	6 regular transistor outputs 2 fast transistor outputs (PWM/PLS)(3)	Yes	1 serial line port USB programming port 1 Ethernet port	Removable spring terminal blocks
TM221M32TK *(see page 277)*	12 regular inputs(1) 4 fast inputs (HSC)(2)	14 regular transistor outputs 2 fast outputs (PWM/PLS)(3)	Yes	2 serial line ports 1 USB programming port	HE10 (MIL 20) connectors
TM221ME32TK *(see page 277)*	12 regular inputs(1) 4 fast inputs (HSC)(2)	14 regular outputs 2 fast outputs (PWM/PLS)(3)	Yes	1 serial line port 1 USB programming port 1 Ethernet port	HE10 (MIL 20) connectors

(1) The regular inputs have a maximum frequency of 5 kHz.
(2) The fast inputs can be used either as regular inputs or as fast inputs for counting or event functions.
(3) The fast transistor outputs can be used as regular transistor outputs, or for PWM, PLS functions, or reflex outputs for HSC.

Delivery Content

The following figure shows the content of the delivery for a TM221M Logic Controller:

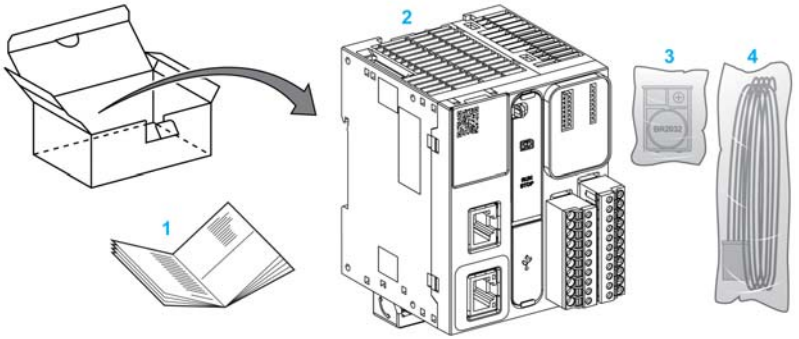

1 TM221M Logic Controller Instruction Sheet
2 TM221M Logic Controller
3 Battery holder with lithium carbon monofluoride battery, type Panasonic BR2032.
4 Analog cable

Maximum Hardware Configuration

Introduction

The M221 Logic Controller is a control system that offers an all-in-one solution with optimized configurations and an expandable architecture.

Local and Remote Configuration Principle

The following figure defines the local and remote configurations:

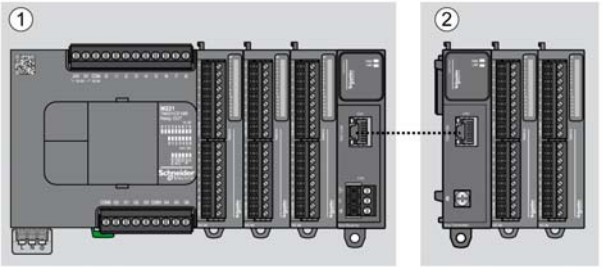

(1) Local configuration
(2) Remote configuration

M221 Logic Controller Local Configuration Architecture

Optimized local configuration and flexibility are provided by the association of:

- M221 Logic Controller
- TM3 expansion modules
- TM2 expansion modules

Application requirements determine the architecture of your M221 Logic Controller configuration.

The following figure represents the components of a local configuration:

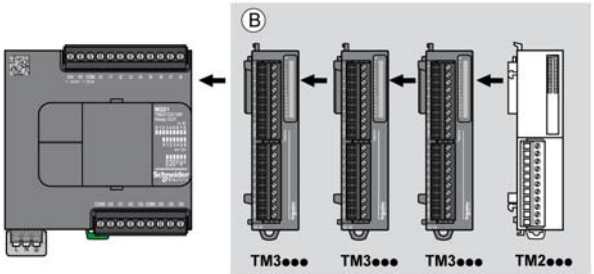

(B) Expansion modules (see maximum number of modules)

NOTE: It is prohibited to mount a TM2 module before any TM3 module as indicated in the following figure:

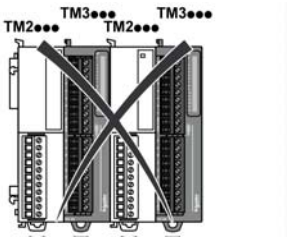

M221 Logic Controller Remote Configuration Architecture

Optimized remote configuration and flexibility are provided by the association of:

- M221 Logic Controller
- TM3 expansion modules
- TM3 transmitter and receiver modules

Application requirements determine the architecture of your M221 Logic Controller configuration.

NOTE: You cannot use TM2 modules in configurations that include the TM3 transmitter and receiver modules.

The following figure represents the components of a remote configuration:

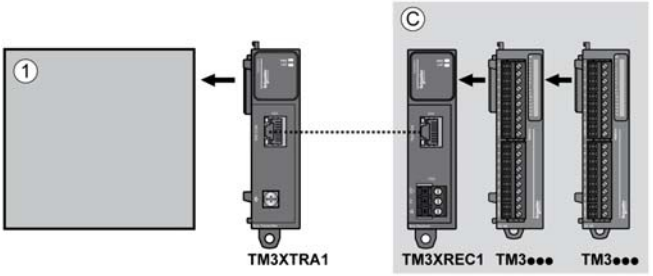

(1) Logic controller and modules
(C) Expansion modules (7 maximum)

Maximum Number of Modules

The following table shows the maximum configuration supported:

References	Maximum	Type of Configuration
TM221C16• TM221CE16•	4 TM3 / TM2 expansion modules	Local
NOTE: TM3 transmitter and receiver modules are not included in a count of the maximum number of expansion modules.		

References	Maximum	Type of Configuration
TM221C24• TM221CE24• TM221C40• TM221CE40• TM221M16R• TM221ME16R• TM221M16T• TM221ME16T• TM221M32TK TM221ME32TK	7 TM3 / TM2 expansion modules	Local
TM3XREC1	7 TM3 expansion modules	Remote
NOTE: TM3 transmitter and receiver modules are not included in a count of the maximum number of expansion modules.		

NOTE: The configuration with its TM3 and TM2 expansion modules is validated by SoMachine Basic software in the **Configuration** window.

NOTE: In some environments, the maximum configuration populated by high consummation modules, coupled with the maximum distance allowable between the TM3 transmitter and receiver modules, may present bus communication issues although the SoMachine Basic software allows for the configuration. In such a case you will need to analyze the consummation of the modules chosen for your configuration, as well as the minimum cable distance required by your application, and possibly seek to optimize your choices.

Current Supplied to the I/O Bus

The following table shows the maximum current supplied by the controllers to the I/O Bus:

Reference	IO Bus 5 Vdc	IO Bus 24 Vdc
TM221C16R TM221CE16R	325 mA	120 mA
TM221C16T TM221CE16T	325 mA	148 mA
TM221C24R TM221CE24R	520 mA	160 mA
TM221C24T TM221CE24T	520 mA	200 mA
TM221C40R TM221CE40R	520 mA	240 mA
TM221C40T TM221CE40T	520 mA	304 mA
TM221M16R• TM221ME16R•	520 mA	460 mA

Reference	IO Bus 5 Vdc	IO Bus 24 Vdc
TM221M16T• TM221ME16T•	520 mA	492 mA
TM221M32TK TM221ME32TK	520 mA	484 mA

NOTE: Expansion modules consume current from the 5 Vdc and 24 Vdc supplied to the I/O Bus. Therefore, the current delivered by the logic controller to the I/O Bus defines the maximum number of expansion modules that can be connected to the I/O Bus (validated by SoMachine Basic software in the **Configuration** window).

TMC2 Cartridges

Overview

You can expand the number of I/Os or communication options of your Modicon TM221C Logic Controller by adding TMC2 cartridges.

For more information, refer to the TMC2 Cartridges Hardware Guide.

TMC2 Standard Cartridges

The following table shows the standard TMC2 cartridges with the corresponding channel type, voltage/current range, and terminal type:

Reference	Channels	Channel Type	Voltage Current	Terminal Type
TMC2AI2	2	Analog inputs (voltage or current)	0...10 Vdc 0...20 mA or 4...20 mA	3.81 mm (0.15 in.) pitch, non-removable screw terminal block
TMC2TI2	2	Analog temperature inputs	Thermocouple type K, J, R, S, B, E, T, N,C 3 wires RTD type Pt100, Pt1000, Ni100, Ni1000	3.81 mm (0.15 in.) pitch, non-removable screw terminal block
TMC2AQ2V	2	Analog voltage outputs	0...10 Vdc	3.81 mm (0.15 in.) pitch, non-removable screw terminal block
TMC2AQ2C	2	Analog current outputs	4...20 mA	3.81 mm (0.15 in.) pitch, non-removable screw terminal block
TMC2SL1 (1)	1	Serial line	RS232 or RS485	3.81 mm (0.15 in.) pitch, non-removable screw terminal block
(1) Only one serial line cartridge (TMC2SL1, TMC2CONV01) may be added to a logic controller.				

TMC2 Application Cartridges

The following table shows the application TMC2 cartridges with the corresponding channel type, voltage/current range, and terminal type:

Reference	Channels	Channel Type	Voltage Current	Terminal Type
TMC2HOIS01	2	Analog inputs (voltage or current)	0...10 Vdc 0...20 mA or 4...20 mA	3.81 mm (0.15 in.) pitch, non-removable screw terminal block
(1) Only one serial line cartridge (TMC2SL1, TMC2CONV01) may be added to a logic controller.				

Reference	Channels	Channel Type	Voltage Current	Terminal Type
TMC2PACK01	2	Analog inputs (voltage or current)	0...10 Vdc 0...20 mA or 4...20 mA	3.81 mm (0.15 in.) pitch, non-removable screw terminal block
TMC2CONV01 (1)	1	Serial line	RS232 or RS485	3.81 mm (0.15 in.) pitch, non-removable screw terminal block
(1) Only one serial line cartridge (TMC2SL1, TMC2CONV01) may be added to a logic controller.				

TM3 Expansion Modules

Introduction

The range of TM3 expansion modules includes:

- Digital modules, classified as follows:
  - Input modules *(see page 30)*
  - Output modules *(see page 31)*
  - Mixed input/output modules *(see page 33)*
- Analog modules, classified as follows:
  - Input modules *(see page 33)*
  - Output modules *(see page 35)*
  - Mixed input/output modules *(see page 35)*
- Expert modules *(see page 36)*
- Transmitter and Receiver modules *(see page 36)*

For more information, refer to the following documents:

- TM3 Digital I/O Modules Hardware Guide
- TM3 Analog I/O Modules Hardware Guide
- TM3 Expert I/O Module

Reference	Channels	Channel Type	Voltage Current	Terminal Type / Pitch
TM3DI16K	16	Regular inputs	24 Vdc 5 mA	HE10 (MIL 20) connector
TM3DI32K	32	Regular inputs	24 Vdc 5 mA	HE10 (MIL 20) connector

TM3 Digital Output Modules

The following table shows the TM3 digital output expansion modules, with corresponding channel type, nominal voltage/current, and terminal type:

Reference	Channels	Channel Type	Voltage Current	Terminal Type / Pitch
TM3DQ8R	8	Relay outputs	24 Vdc / 240 Vac 7 A maximum per common line / 2 A maximum per output	Removable screw terminal block / 5.08 mm
TM3DQ8RG	8	Relay outputs	24 Vdc / 240 Vac 7 A maximum per common line / 2 A maximum per output	Removable spring terminal block / 5.08 mm
TM3DQ8T	8	Regular transistor outputs (source)	24 Vdc 4 A maximum per common line/0.5 A maximum per output	Removable screw terminal block / 5.08 mm
TM3DQ8TG	8	Regular transistor outputs (source)	24 Vdc 4 A maximum per common line/0.5 A maximum per output	Removable spring terminal block / 5.08 mm
TM3DQ8U	8	Regular transistor outputs (sink)	24 Vdc 4 A maximum per common line/0.5 A maximum per output	Removable screw terminal block / 5.08 mm
TM3DQ8UG	8	Regular transistor outputs (sink)	24 Vdc 4 A maximum per common line/0.5 A maximum per output	Removable spring terminal block / 5.08 mm
TM3DQ16R	16	Relay outputs	24 Vdc / 240 Vac 8 A maximum per common line / 2 A maximum per output	Removable screw terminal blocks / 3.81 mm

Reference	Channels	Channel Type	Voltage Current	Terminal Type / Pitch
TM3DQ16RG	16	Relay outputs	24 Vdc / 240 Vac 8 A maximum per common line / 2 A maximum per output	Removable spring terminal blocks / 3.81 mm
TM3DQ16T	16	Regular transistor outputs (source)	24 Vdc 4 A maximum per common line / 0.5 A maximum per output	Removable screw terminal blocks / 3.81 mm
TM3DQ16TG	16	Regular transistor outputs (source)	24 Vdc 4 A maximum per common line / 0.5 A maximum per output	Removable spring terminal blocks / 3.81 mm
TM3DQ16U	16	Regular transistor outputs (sink)	24 Vdc 2 A maximum per common line / 0.4 A maximum per output	Removable screw terminal blocks / 3.81 mm
TM3DQ16UG	16	Regular transistor outputs (sink)	24 Vdc 2 A maximum per common line / 0.4 A maximum per output	Removable spring terminal blocks / 3.81 mm
TM3DQ16TK	16	Regular transistor outputs (source)	24 Vdc 2 A maximum per common line / 0.1 A maximum per output	HE10 (MIL 20) connector
TM3DQ16UK	16	Regular transistor outputs (sink)	24 Vdc 2 A maximum per common line / 0.1 A maximum per output	HE10 (MIL 20) connector
TM3DQ32TK	32	Regular transistor outputs (source)	24 Vdc 2 A maximum per common line / 0.1 A maximum per output	HE10 (MIL 20) connectors
TM3DQ32UK	32	Regular transistor outputs (sink)	24 Vdc 2 A maximum per common line / 0.1 A maximum per output	HE10 (MIL 20) connectors

TM3 Digital Mixed Input/Output Modules

This following table shows the TM3 mixed I/O modules, with corresponding channel type, nominal voltage/current, and terminal type:

Reference	Channels	Channel Type	Voltage Current	Terminal Type / Pitch
TM3DM8R	4	Regular inputs	24 Vdc 7 mA	Removable screw terminal block / 5.08 mm
	4	Relay outputs	24 Vdc / 240 Vac 7 A maximum per common line / 2 A maximum per output	
TM3DM8RG	4	Regular inputs	24 Vdc 7 mA	Removable spring terminal block /5.08 mm
	4	Relay outputs	24 Vdc / 240 Vac 7 A maximum per common line / 2 A maximum per output	
TM3DM24R	16	Regular inputs	24 Vdc 7 mA	Removable screw terminal blocks / 3.81 mm
	8	Relay outputs	24 Vdc / 240 Vac 7 A maximum per common line / 2 A maximum per output	
TM3DM24RG	16	Regular inputs	24 Vdc 7 mA	Removable spring terminal blocks / 3.81 mm
	8	Relay outputs	24 Vdc / 240 Vac 7 A maximum per common line / 2 A maximum per output	

TM3 Analog Input Modules

The following table shows the TM3 analog input expansion modules, with corresponding resolution, channel type, nominal voltage/current, and terminal type:

Reference	Resolution	Channels	Channel Type	Mode	Terminal Type / Pitch
TM3AI2H	16 bit, or 15 bit + sign	2	inputs	0...10 Vdc -10…+10 Vdc 0...20 mA 4...20 mA	Removable screw terminal block / 5.08 mm

Reference	Resolution	Channels	Channel Type	Mode	Terminal Type / Pitch
TM3AI2HG	16 bit, or 15 bit + sign	2	inputs	0...10 Vdc -10…+10 Vdc 0...20 mA 4...20 mA	Removable spring terminal block / 5.08 mm
TM3AI4	12 bit, or 11 bit + sign	4	inputs	0...10 Vdc -10…+10 Vdc 0...20 mA 4...20 mA	Removable screw terminal block / 3.81 mm
TM3AI4G	12 bit, or 11 bit + sign	4	inputs	0...10 Vdc -10…+10 Vdc 0...20 mA 4...20 mA	Removable spring terminal blocks / 3.81 mm
TM3AI8	12 bit, or 11 bit + sign	8	inputs	0...10 Vdc -10…+10 Vdc 0...20 mA 4...20 mA	Removable screw terminal block / 3.81 mm
TM3AI8G	12 bit, or 11 bit + sign	8	inputs	0...10 Vdc -10…+10 Vdc 0...20 mA 4...20 mA	Removable spring terminal blocks / 3.81 mm
TM3TI4	16 bit, or 15 bit + sign	4	inputs	0...10 Vdc -10…+10 Vdc 0...20 mA 4...20 mA Thermocouple PT100/1000 NI100/1000	Removable screw terminal block / 3.81 mm
TM3TI4G	16 bit, or 15 bit + sign	4	inputs	0...10 Vdc -10…+10 Vdc 0...20 mA 4...20 mA Thermocouple PT100/1000 NI100/1000	Removable spring terminal blocks / 3.81 mm
TM3TI8T	16 bit, or 15 bit + sign	8	inputs	Thermocouple NTC/PTC	Removable screw terminal block / 3.81 mm
TM3TI8TG	16 bit, or 15 bit + sign	8	inputs	Thermocouple NTC/PTC	Removable spring terminal blocks / 3.81 mm

TM3 Analog Output Modules

The following table shows the TM3 analog output modules, with corresponding resolution, channel type, nominal voltage/current, and terminal type:

Reference	Resolution	Channels	Channel Type	Mode	Terminal Type / Pitch
TM3AQ2	12 bit, or 11 bit + sign	2	outputs	0...10 Vdc -10…+10 Vdc 0...20 mA 4...20 mA	Removable screw terminal block / 5.08 mm
TM3AQ2G	12 bit, or 11 bit + sign	2	outputs	0...10 Vdc -10…+10 Vdc 0...20 mA 4...20 mA	Removable spring terminal block / 5.08 mm
TM3AQ4	12 bit, or 11 bit + sign	4	outputs	0...10 Vdc -10…+10 Vdc 0...20 mA 4...20 mA	Removable screw terminal block / 5.08 mm
TM3AQ4G	12 bit, or 11 bit + sign	4	outputs	0...10 Vdc -10…+10 Vdc 0...20 mA 4...20 mA	Removable spring terminal block / 5.08 mm

TM3 Analog Mixed Input/Output Modules

This following table shows the TM3 analog mixed I/O modules, with corresponding resolution, channel type, nominal voltage/current, and terminal type:

Reference	Resolution	Channels	Channel Type	Mode	Terminal Type / Pitch
TM3AM6	12 bit, or 11 bit + sign	4	inputs	0...10 Vdc -10...+10 Vdc 0...20 mA 4...20 mA	Removable spring terminal block / 3.81 mm
		2	outputs		
TM3AM6G	12 bit, or 11 bit + sign	4	inputs	0...10 Vdc -10...+10 Vdc 0...20 mA 4...20 mA	Removable spring terminal block / 3.81 mm
		2	outputs		

Reference	Resolution	Channels	Channel Type	Mode	Terminal Type / Pitch
TM3TM3	16 bit, or 15 bit + sign	2	inputs	0...10 Vdc -10...+10 Vdc 0...20 mA 4...20 mA Thermocouple PT100/1000 NI100/1000	Removable screw terminal block / 5.08 mm
	12 bit, or 11 bit + sign	1	output	0...10 Vdc -10...+10 Vdc 0...20 mA 4...20 mA	
TM3TM3G	16 bit, or 15 bit + sign	2	inputs	0...10 Vdc -10...+10 Vdc 0...20 mA 4...20 mA Thermocouple PT100/1000 NI100/1000	Removable spring terminal block / 5.08 mm
	12 bit, or 11 bit + sign	1	output	0...10 Vdc -10...+10 Vdc 0...20 mA 4...20 mA	

TM3 Expert Module

The following table shows the TM3 expert expansion module, with corresponding terminal type:

Reference	Description	Terminal Type / Pitch
TM3XTYS4	TeSys module	4 front connectors RJ-45 1 power supply connector / 5.08 mm

TM3 Transmitter and Receiver Modules

The following table shows the TM3 transmitter and receiver expansion modules:

Reference	Description	Terminal Type / Pitch
TM3XTRA1	Data transmitter module for remote I/O	1 front connector RJ-45 1 screw for functional ground connection
TM3XREC1	Data receiver module for remote I/O	1 front connector RJ-45 Power supply connector / 5.08 mm

TM2 Expansion Modules

Overview

You can expand the number of I/Os of your M221 Logic Controller by adding TM2 I/O expansion modules.

The following types of electronic modules are supported:
- TM2 digital I/O expansion modules
- TM2 analog I/O expansion modules

For more information, refer to the following documents:
- TM2 Digital I/O Expansion Modules Hardware Guide
- TM2 Analog I/O Expansion Modules Hardware Guide

NOTE: TM2 modules can only be used in the local configuration, and only if there is no TM3 transmitter and receiver modules present in the configuration.

NOTE: It is prohibited to mount a TM2 module before any TM3 module. The TM2 modules must be mounted and configured at the end of the local configuration.

TM2 Digital Input Expansion Modules

The following table shows the compatible TM2 digital input expansion modules with the corresponding channel type, nominal voltage/current, and terminal type:

Reference	Channels	Channel Type	Voltage Current	Terminal Type
TM2DAI8DT	8	Regular inputs	120 Vac 7.5 mA	Removable screw terminal block
TM2DDI8DT	8	Regular inputs	24 Vdc 7 mA	Removable screw terminal block
TM2DDI16DT	16	Regular inputs	24 Vdc 7 mA	Removable screw terminal block
TM2DDI16DK	16	Regular inputs	24 Vdc 5 mA	HE10 (MIL 20) connector
TM2DDI32DK	32	Regular inputs	24 Vdc 5 mA	HE10 (MIL 20) connector

TM2 Digital Output Expansion Modules

The following table shows the compatible TM2 digital output expansion modules with the corresponding channel type, nominal voltage/current, and terminal type:

Reference	Channels	Channel type	Voltage Current	Terminal type
TM2DRA8RT	8	Relay outputs	30 Vdc / 230 Vac 2 A max	Removable screw terminal block
TM2DRA16RT	16	Relay outputs	30 Vdc / 230 Vac 2 A max	Removable screw terminal block
TM2DDO8UT	8	Regular transistor outputs (sink)	24 Vdc 0.3 A max per output	Removable screw terminal block
TM2DDO8TT	8	Regular transistor outputs (source)	24 Vdc 0.5 A max per output	Removable screw terminal block
TM2DDO16UK	16	Regular transistor outputs (sink)	24 Vdc 0.1 A max per output	HE10 (MIL 20) connector
TM2DDO16TK	16	Regular transistor outputs (source)	24 Vdc 0.4 A max per output	HE10 (MIL 20) connector
TM2DDO32UK	32	Regular transistor outputs (sink)	24 Vdc 0.1 A max per output	HE10 (MIL 20) connector
TM2DDO32TK	32	Regular transistor outputs (source)	24 Vdc 0.4 A max per output	HE10 (MIL 20) connector

TM2 Digital Mixed Input/Output Expansion Modules

The following table shows the compatible TM2 digital mixed I/O expansion modules with the corresponding channel type, nominal voltage/current, and terminal type:

Reference	Channels	Channel type	Voltage Current	Terminal type
TM2DMM8DRT	4	Regular inputs	24 Vdc 7 mA	Removable screw terminal block
	4	Relay outputs	24 Vdc / 240 Vac 7 A maximum per common line / 2 A maximum per output	
TM2DMM24DRF	16	Regular inputs	24 Vdc 7 mA	Non-removable spring terminal block
	8	Relay outputs	24 Vdc / 240 Vac 7 A maximum per common line / 2 A maximum per output	

TM2 Analog Input Expansion Modules

The following table shows the compatible TM2 analog input expansion modules with the corresponding channel type, nominal voltage/current, and terminal type:

Reference	Channels	Channel type	Voltage Current	Terminal Type
TM2AMI2HT	2	High-level inputs	0...10 Vdc 4...20 mA	Removable screw terminal block
TM2AMI2LT	2	Low-level inputs	Thermocouple type J,K,T	Removable screw terminal block
TM2AMI4LT	4	Analog inputs	0...10 Vdc 0...20 mA PT100/1000 Ni100/1000	Removable screw terminal block
TM2AMI8HT	8	Analog inputs	0...20 mA 0...10 Vdc	Removable screw terminal block
TM2ARI8HT	8	Analog inputs	NTC / PTC	Removable screw terminal block
TM2ARI8LRJ	8	Analog inputs	PT100/1000	RJ11 connector
TM2ARI8LT	8	Analog inputs	PT100/1000	Removable screw terminal block

TM2 Analog Output Expansion Modules

The following table shows the compatible TM2 analog output expansion modules with the corresponding channel type, nominal voltage/current, and terminal type:

Reference	Channels	Channel type	Voltage Current	Terminal Type
TM2AMO1HT	1	Analog outputs	0...10 Vdc 4...20 mA	Removable screw terminal block
TM2AVO2HT	2	Analog outputs	+/- 10 Vdc	Removable screw terminal block

TM2 Analog Mixed Input/Output Expansion Modules

The following table shows the compatible TM2 analog mixed I/O expansion modules with the corresponding channel type, nominal voltage/current, and terminal type:

Reference	Channels	Channel type	Voltage Current	Terminal Type
TM2AMM3HT	2	Analog inputs	0...10 Vdc 4...20 mA	Removable screw terminal block
	1	Analog outputs	0...10 Vdc 4...20 mA	

Reference	Channels	Channel type	Voltage Current	Terminal Type
TM2AMM6HT	4	Analog inputs	0...10 Vdc 4...20 mA	Removable screw terminal block
	2	Analog outputs	0...10 Vdc 4...20 mA	
TM2ALM3LT	2	Low-level inputs	Thermo J,K,T, PT100	Removable screw terminal block
	1	Analog outputs	0...10 Vdc 4...20 mA	

Accessories

Overview

This section describes the accessories, cables, and Telefast.

Accessories

Reference	Description	Use	Quantity
TMASD1	SD Card (*see page 62*)	Use to update the controller firmware, initialize a controller with a new application or clone a controller.	1
TMAT2MSET	Set of 5 removable screw terminal block	Connects M221 Logic Controller embedded I/Os.	1
TMAT2MSETG	Set of 5 removable spring terminal block	Connects M221 Logic Controller embedded I/Os.	1
TMAT2PSET	Set of 5 removable screw terminal block	Connects 24 Vdc power supply.	1
AB1AB8P35	End brackets	Help secure the logic controller or receiver module and their expansion modules on a top hat section rail (DIN rail).	1
TM2XMTGB	Grounding Bar	Connects the cable shield and the module to the functional ground.	1
TM200RSRCEMC	Shielding take-up clip	Mounts and connects the ground to the cable shielding.	25 pack
TMAM2	Mounting Kit	Mounts the controller and I/O modules directly to a flat, vertical panel.	1

Cables

Reference	Description	Details	Length
BMXXCAUSBH018	Terminal port/USB port cordset	From the USB mini-B port on the TM221C Logic Controller to USB port on the PC terminal. **NOTE:** Grounded and shielded, this USB cable is suitable for long duration connections.	1.8 m (5.9 ft)
BMXXCAUSBH045	Terminal port/USB port cordset	From the USB mini-B port on the TM221M Logic Controller to USB port on the PC terminal. **NOTE:** Grounded and shielded, this USB cable is suitable for long durationc onnections.	4.5 m (14.8 ft)
TMACBL1	Analog cables	Cable equipped with a connector	1 m (3.28 ft)

Reference	Description	Details	Length
TCSMCN3M4F3C2	RS-232 serial link cordset 1 RJ45 connector and 1 SUB-D 9 connector	For DTE terminal (printer)	3 m (9.84 ft)
TCSMCN3M4M3S2	RS-232 serial link cordset 1 RJ45 connector and 1 SUB-D 9 connector	For DCE terminal (modem, converter)	3 m (9.84 ft)
TWDFCW30K	Digital I/O cables with free wires for 20-pin Modular controller	Cable equipped at a one end with an HE10 connector. (AWG 22 / 0.34 mm^2)	3 m (9.84 ft)
TWDFCW50K		Cable equipped at a one end with an HE10 connector. (AWG 22 / 0.34 mm^2)	5 m (16.4 ft)

TWDFCW••K Cable Description

The following table provides specifications for the TWDFCW30K/50K with free wires for 20-pin connectors (HE10 or MIL20):

Cable illustration	Pin Connector	Wire Color
	1	White
	2	Brown
	3	Green
	4	Yellow
	5	Grey
	6	Pink
	7	Blue
	8	Red
	9	Black
	10	Violet
	11	Grey and pink
	12	Red and blue
	13	White and green
	14	Brown and green
	15	White and yellow
	16	Yellow and brown
	17	White and grey
	18	Grey and brown
	19	White and pink
	20	Pink and brown

Telefast Pre-Wiring Sub-bases

The following illustration shows the Telefast system:

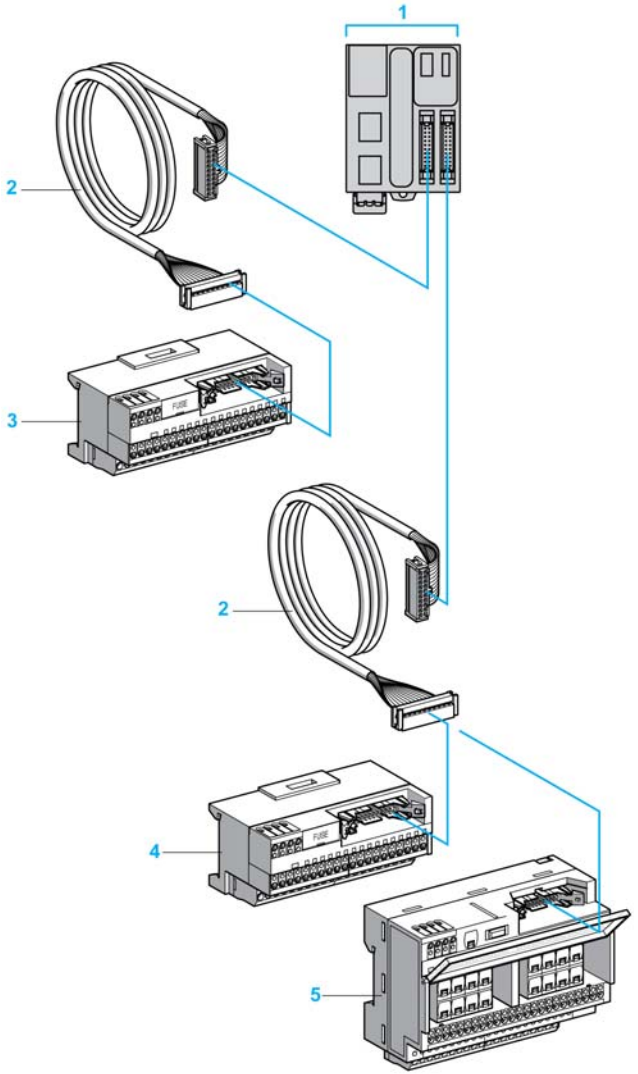

1 TM221M32TK / TM221ME32TK
2 Cable (ABFT20E••0) equipped with a 20-way HE 10 connector at each end. This cable is available in 0.5, 1 and 2 meter lengths (AWG 28/0.08 mm^2)
3 16 channel sub-base (ABE7E16EPN20) for input extension modules.
4 16 channel sub-base (ABE7E16SPN20) for output extension modules.
5 16 channel sub-base (ABE7E16SPN22 or ABE716SRM20) for output extension modules.

Telefast Sub-base Reference

The following table describes compatibility between the M221 Logic Controller and Telefast components:

Telefast Module Description			M221 Logic Controller	
Type	**Channel**	**Reference**	**16 Inputs**	**16 Outputs**
Passive connection sub-bases	16	ABE7E16EPN20	X	–
		ABE7E16SPN20	–	X
		ABE7E16SPN22	–	X
Relay output connection sub-base	16	ABE7E16SRM20	–	X

Chapter 2
M221 Features

Overview

This chapter describes the Modicon M221 Logic Controller features.

What Is in This Chapter?

This chapter contains the following topics:

Topic	Page
Real Time Clock (RTC)	48
Input Management	55
Output Management	57
Run/Stop	60
SD Card	62

Real Time Clock (RTC)

Overview

The M221 Logic Controller includes an RTC to provide system date and time information, and to support related functions requiring a real-time clock. To continue keeping time when power is off, a non-rechargeable battery is required (see reference below). A battery LED on the front panel of the controller indicates if the battery is depleted or absent.

This table shows how RTC drift is managed:

RTC Characteristics	Description
RTC drift	Less than 30 seconds per month without any user calibration at 25 °C (77 °F)

Battery

The controller has one backup battery.

In the event of a power interruption, the backup battery maintains the RTC for the controller. It also saves all data.

This table shows the characteristics of the battery:

Characteristics	Description
Use	In the event of a transient power outage, the battery powers the RTC and user data.
Backup life	At least 1 year at 25 °C max (77 °F). At higher temperatures, the time is reduced.
Battery monitoring	Yes
Replaceable	Yes
Battery life	4 years at 25 °C max (77 °F). At higher temperatures, the time is reduced.
Controller battery type	Lithium carbon monofluoride, type Panasonic BR2032

Installing and Replacing the Battery

While lithium batteries are preferred due to their slow discharge and long life, they can present hazards to personnel, equipment and the environment and must be handled properly.

⚠ DANGER

EXPLOSION, FIRE, OR CHEMICAL BURNS

- Replace with identical battery type.
- Follow all battery manufacturer's instructions.
- Remove all replaceable batteries before discarding unit.
- Recycle or properly dispose of used batteries.
- Protect battery from any potential short-circuit.
- Do not recharge, disassemble, heat above 100 °C (212 °F), or incinerate.
- Use your hands or insulated tools to remove or replace the battery.
- Maintain proper polarity when inserting and connecting a new battery.

Failure to follow these instructions will result in death or serious injury.

To install or replace the battery, follow these steps:

Step	Action
1	Remove power from your controller.

Step	Action
2	Use an insulated screw-driver to pull out the battery holder from the TM221C Logic Controller. 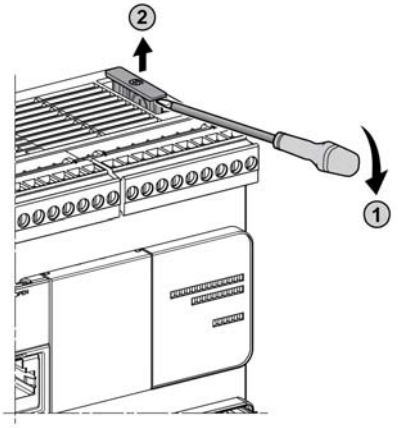 Use an insulated screw-driver to pull out the battery holder from the TM221M Logic Controller. 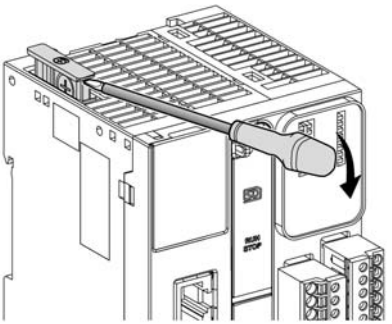

Step	Action
3	Slide out the battery holder of the TM221C Logic Controller. 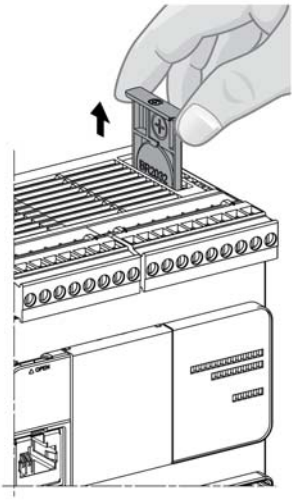 Slide out the battery holder of the TM221M Logic Controller. 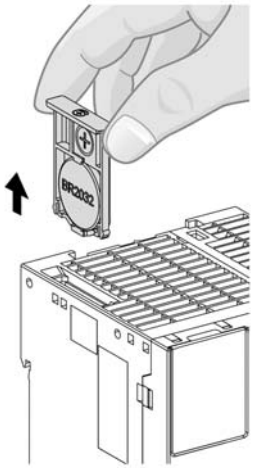

Step	Action
4	Remove the battery from the battery holder. 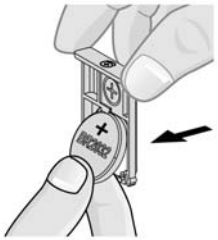
5	Insert the new battery into the battery holder in accordance with the polarity markings on the battery. 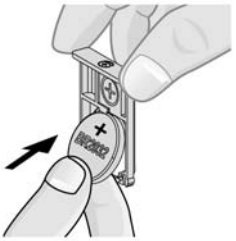
6	Replace the battery holder on the controller and verify that the latch clicks into place. 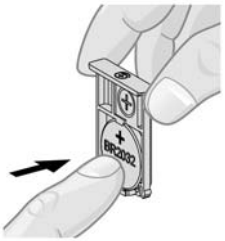

Step	Action
7	Slide in the battery holder of the TM221C Logic Controller. 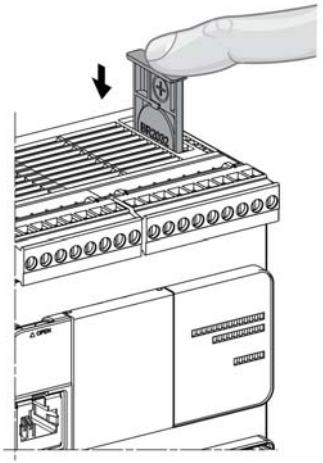 Slide in the battery holder of the TM221M Logic Controller. 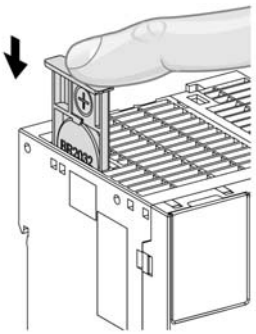
8	Power up your M221 Logic Controller.
9	Set the internal clock. For further details on the internal clock, refer to SoMachine Basic Operating Guide *(see SoMachine Basic, Generic Functions Library Guide)*.

NOTE: Replacement of the battery in the controllers other than with the type specified in this documentation may present a risk of fire or explosion.

⚠ WARNING

IMPROPER BATTERY CAN PROVOKE FIRE OR EXPLOSION

Replace battery only with identical type: Panasonic Type BR2032.

Failure to follow these instructions can result in death, serious injury, or equipment damage.

Input Management

Overview

The M221 Logic Controller features digital inputs, including 4 fast inputs.

The following functions are configurable:

- Filters (depends on the function associated with the input).
- I0...I15 inputs can be used for the Run/Stop function.
- 4 fast inputs can be either latched or used for events (rising edge, falling edge, or both) and thus be linked to an external task.

NOTE: All inputs can be used as regular inputs.

Integrator Filter Principle

The filter is designed to reduce the bouncing effect at the inputs. Setting a filter value helps the controller to ignore sudden changes of input levels caused by induction of electromagnetic interference.

The following timing diagram illustrates the filter effects:

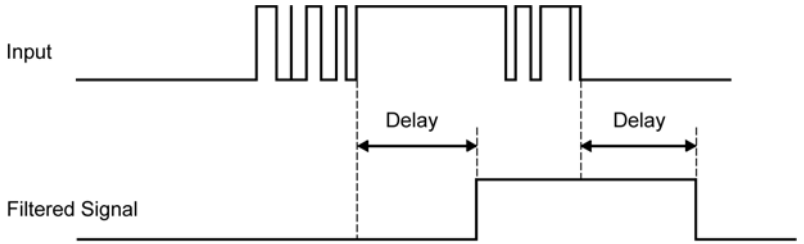

Bounce Filter Availability

The bounce filter can be used on a fast input when:

- Using a latch or event
- HSC is enabled

Latching

Latching is a function that can be assigned to the M221 Logic Controller fast inputs. This function is used to memorize (or latch) any pulse with a duration that is less than the M221 Logic Controller scan time. When a pulse is shorter than one scan, the controller latches the pulse, which is then updated in the next scan. This latching mechanism only recognizes rising edges. Falling edges cannot be latched. Assigning inputs to be latched is done in the **Configuration** tab in SoMachine Basic.

The following timing diagram illustrates the latching effects:

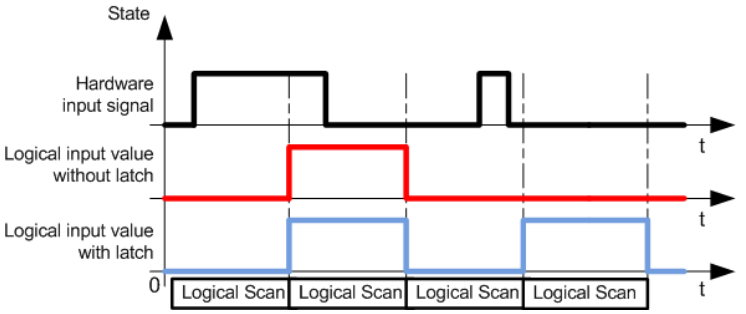

Event

An input configured for Event can be associated with an External Task.

Run/Stop

The Run/Stop function is used to start or stop an application program using an input. In addition to the embedded Run/Stop switch, you can configure one (and only one) input as an additional Run/Stop command.

For more information, refer to the Run/Stop *(see page 60)*.

⚠ WARNING

UNINTENDED MACHINE OR PROCESS START-UP

- Verify the state of security of your machine or process environment before applying power to the Run/Stop input.
- Use the Run/Stop input to help prevent the unintentional start-up from a remote location.

Failure to follow these instructions can result in death, serious injury, or equipment damage.

Output Management

Introduction

The M221 Logic Controller features both regular and fast transistor outputs (PWM / PLS).

The following output functions are configurable on the transistor outputs:

- Alarm output
- HSC (reflex features on HSC threshold)
- PWM
- PLS

NOTE: All outputs can be used as regular outputs.

Output Management Availability

The information below refers to regular and fast transistor outputs on M221 Logic Controllers:

Reference				Function		Alarm Output	HSC0	HSC1	PLS0	PLS1	PWM0	PWM1
TM221C40T / TM221CE40T / TM221M32TK / TM221CE40T / TM221M32TK / TM221ME32TK	TM221C24T / TM221CE24T	TM221M16T• / TM221ME16T•	TM221C16T / TM221CE16T	Fast Output	Q0	X	–	–	PLS0	–	PWM0	–
					Q1	X	–	–	–	PLS1	–	PWM1
				Regular Output	Q2	X	HSC0 reflex output0	–	–	–	–	–
					Q3	X	HSC0 reflex output1	–	–	–	–	–
					Q4	X	–	HSC1 reflex output0	–	–	–	–
					Q5	X	–	HSC1 reflex output1	–	–	–	–
					Q6	X	–	–	–	–	–	–
					Q7	X	–	–	–	–	–	–
					Q8	X	–	–	–	–	–	–
					Q9	X	–	–	–	–	–	–
					Q10	X	–	–	–	–	–	–
					Q11	X	–	–	–	–	–	–
					Q12	X	–	–	–	–	–	–
					Q13	X	–	–	–	–	–	–
					Q14	X	–	–	–	–	–	–
					Q15	X	–	–	–	–	–	–

Fallback Modes (Behavior for Outputs in Stop)

When the controller enters the STOPPED or one of the exception states for any reason, the local (embedded and expansion) outputs are set to **Default Value** defined in the application..

Short-circuit or Over-Current on Transistor Outputs

Outputs are clustered in packs of 4 outputs maximum (less when the total number of outputs of the controller is not a multiple of 4):

- Q0...Q3
- Q4...Q7
- Q8...Q11
- Q12...Q15

When an short-circuit or overload is detected, the cluster of 4 outputs is set to 0. An automatic rearming is done periodically (about 1 s).

The following table describes the actions taken on short-circuits or overload of transistor outputs:

If...	then...
you have short-circuit at 0 V on transistor outputs	Transistor outputs automatically go into thermal protection mode. For more information, refer to transistor output wiring diagrams.

NOTE: You must be aware of the effect of this rearming on the machine or process being controlled.

⚠ WARNING

UNINTENDED MACHINE START-UP

Inhibit the automatic rearming of outputs if this feature is an undesirable behavior for your machine or process.

Failure to follow these instructions can result in death, serious injury, or equipment damage.

Short-circuit or Over-Current on Relay Outputs

Relay outputs are not internally protected against overloads or short-circuits.

The following table describes the actions taken on overloads or short-circuits on relay outputs:

If...	then...
you have short-circuit or overload at 0 V or 24 V on relay outputs	No action is taken and no error is detectable. For more information, refer to relay output wiring diagrams.

Relay outputs are electromechanical switches capable of carrying significant levels of current and voltage. All electromechanical devices have a limited operational life and must be installed so as to minimize the potential for unintended consequences.

⚠ WARNING

INOPERABLE OUTPUTS

Use appropriate, external safety interlocks on outputs where personnel and/or equipment hazards exist.

Failure to follow these instructions can result in death, serious injury, or equipment damage.

Run/Stop

Run/Stop

The M221 Logic Controller can be operated externally by the following:

- a hardware Run/Stop switch
- a Run/Stop *(see page 56)* operation by a dedicated digital input, defined in the software configuration
- a SoMachine Basic software command.

For more information, refer to Configuring Digital Inputs *(see Modicon M221, Logic Controller, Programming Guide)*.

The M221 Logic Controller has a Run/Stop hardware switch, which puts the controller in a RUN or STOP state.

The following figure shows the location of the Run/Stop switch on the TM221C Logic Controller:

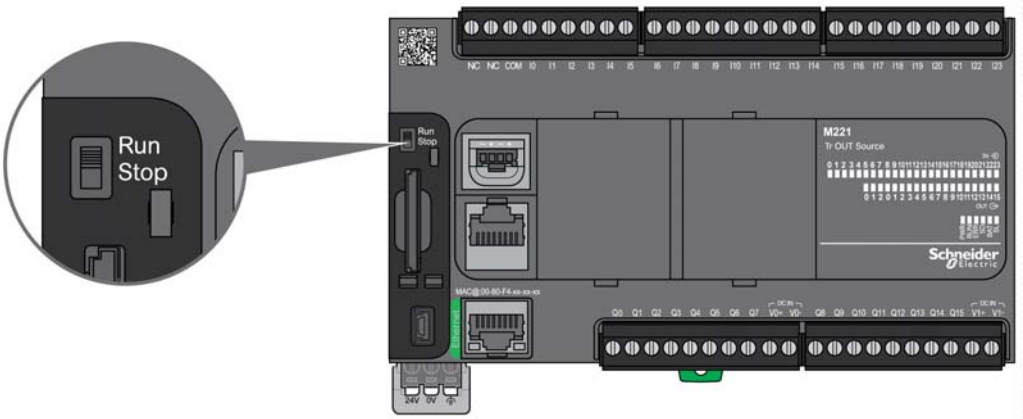

The following figure shows the location of the Run/Stop switch on the TM221M Logic Controller:

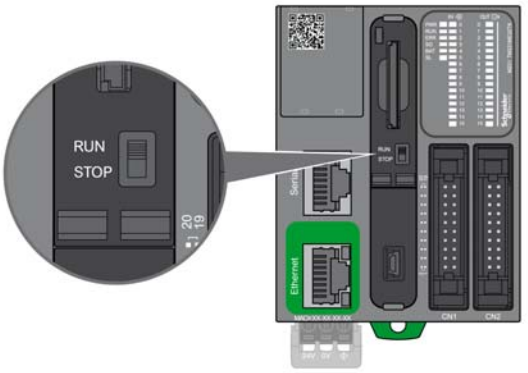

The interaction of the 2 external operators on the controller state behavior is summarized in the table below:

		Embedded Run/Stop hardware switch		
		Switch on Stop	**Stop to Run transition**	**Switch on Run**
Software configurable Run/Stop digital input	**None**	STOP Ignores external Run/Stop commands.	Commands a transition to RUN state[1].	Allows external Run/Stop commands.
	State 0	STOP Ignores external Run/Stop commands.	STOP Ignores external Run/Stop commands.	STOP Ignores external Run/Stop commands.
	Rising edge	STOP Ignores external Run/Stop commands.	Commands a transition to RUN state[1].	Commands a transition to RUN state.
	State 1	STOP Ignores external Run/Stop commands.	Commands a transition to RUN state[1].	Allows external Run/Stop commands.
[1] For more information, refer to the Controller States and Behaviors *(see Modicon M221, Logic Controller, Programming Guide)*.				

⚠ WARNING

UNINTENDED MACHINE OR PROCESS START-UP

- Verify the state of security of your machine or process environment before applying power to the Run/Stop input or engaging the Run/Stop switch.
- Use the Run/Stop input to help prevent the unintentional start-up from a remote location, or from accidentally engaging the Run/Stop switch.

Failure to follow these instructions can result in death, serious injury, or equipment damage.

SD Card

Overview

When handling the SD card, follow the instructions below to help prevent internal data on the SD card from being corrupted or lost or a SD card malfunction from occurring:

NOTICE

LOSS OF APPLICATION DATA

- Do not store the SD card where there is static electricity or probable electromagnetic fields.
- Do not store the SD card in direct sunlight, near a heater, or other locations where high temperatures can occur.
- Do not bend the SD card.
- Do not drop or strike the SD card against another object.
- Keep the SD card dry.
- Do not touch the SD card connectors.
- Do not disassemble or modify the SD card.
- Use only SD cards formatted using FAT or FAT32.

Failure to follow these instructions can result in equipment damage.

The M221 Logic Controller does not recognize NTFS formatted SD cards. Format the SD card on your computer using FAT or FAT32.

When using the M221 Logic Controller and a SD card, observe the following to avoid losing valuable data:

- Accidental data loss can occur at any time. Once data is lost it cannot be recovered.
- If you forcibly extract the SD card, data on the SD card may become corrupted.
- Removing an SD card that is being accessed could damage the SD card, or corrupt its data.
- If the SD card is not positioned correctly when inserted into the controller, the data on the card and the controller could become damaged.

NOTICE

LOSS OF APPLICATION DATA

- Backup SD card data regularly.
- Do not remove power or reset the controller, and do not insert or remove the SD card while it is being accessed.
- Become familiar with the proper orientation of the SD card when inserting it into the controller.

Failure to follow these instructions can result in equipment damage.

The following figure shows the SD card slot of the TM221C Logic Controller:

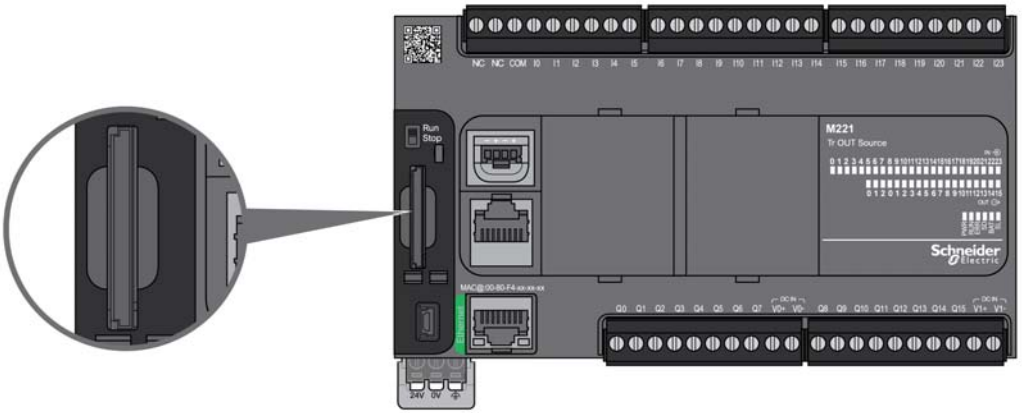

The following figure shows the SD card slot of the TM221M Logic Controller:

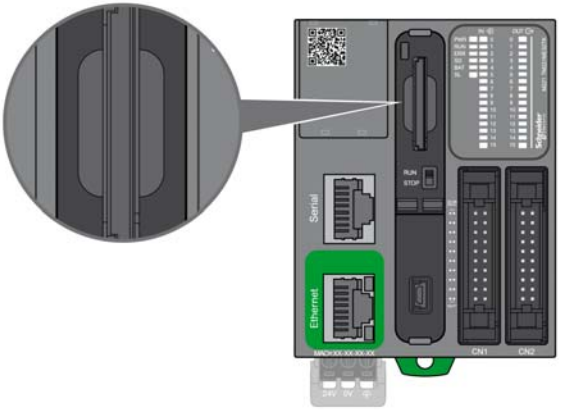

It is possible to set the Write-Control Tab to prevent write operations to the SD card. Push the tab up, as shown in the example on the right-hand side, to release the lock and enable writing to the SD card. Before using an SD card, read the manufacturer's instructions.

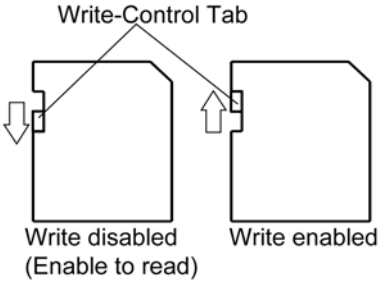

Step	Action
1	Insert the SD card into the SD card slot of the TM221C Logic Controller: 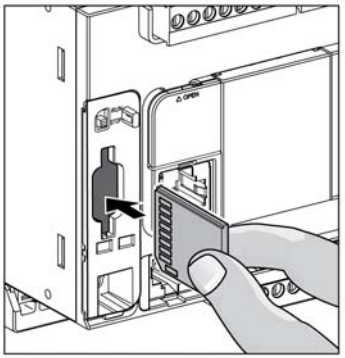 Insert the SD card into the SD card slot of the TM221M Logic Controller: 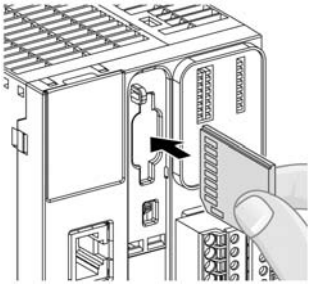

Step	Action
2	Push until you hear it “click” (TM221C Logic Controller): 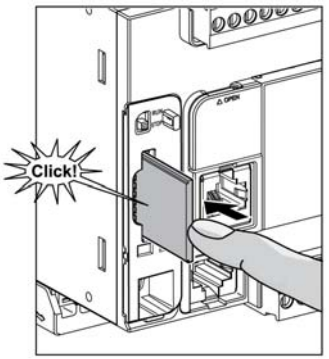 Push until you hear it “click” (TM221M Logic Controller): 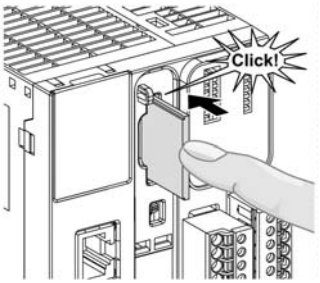

SD Card Slot Characteristics

Topic	Characteristics	Description
Supported type	Standard Capacity	SD (SDSC)
	High Capacity	SDHC
Global memory	Size	32 GB max.
Memory organization	Application backup size	64 MB
	Data storage size	1.93 GB
Robustness	Write/erase cycles (typical)	100,000
	Temperature operating range	–40...+85 °C (–40...+185 °F)
	File retention time	10 years

TMASD1 Characteristics

Characteristics	Description
Card removal durability	Minimum 1000 times
File retention time	10 years @ 25 °C (77 °F)
Flash type	SLC NAND
Memory size	512 MB
Ambient operation temperature	–10 … +85° C (14...185 °F)
Storage temperature	–25 … +85° C (–13...185 °F)
Relative humidity	95% max. non-condensing
Write/Erase cycles	3,000,000 (approximately)

NOTE: The TMASD1 has been rigorously tested in association with the logic controller. For other commercially available cards, please consult your local sales representative.

NOTE: The SD card can be used directly on your PC.

Status LED

The following figure shows the status LEDs of the TM221C Logic Controller:

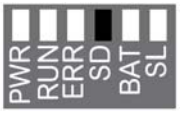

The following figure shows the status LEDs of the TM221M Logic Controller:

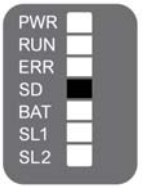

The following table describes the SD card status LED:

Label	Description	LED		
		Color	Status	Description
SD	SD card	Green	On	Indicates that the SD card is being accessed.
			Off	Indicates no access.
			Flashing	Indicates that an error was detected during the SD card operation.

Chapter 3
M221 Installation

Overview

This chapter provides installation safety guidelines, device dimensions, mounting instructions, and environmental specifications.

What Is in This Chapter?

This chapter contains the following sections:

Section	Topic	Page
3.1	M221 Logic Controller General Rules for Implementing	68
3.2	M221 Logic Controller Installation	73
3.3	M221 Electrical Requirements	91

Section 3.1
M221 Logic Controller General Rules for Implementing

What Is in This Section?

This section contains the following topics:

Topic	Page
Environmental Characteristics	69
Certifications and Standards	72

Environmental Characteristics

Enclosure Requirements

M221 Logic Controller system components are designed as Zone B, Class A industrial equipment according to IEC/CISPR Publication 11. If they are used in environments other than those described in the standard, or in environments that do not meet the specifications in this manual, the ability to meet electromagnetic compatibility requirements in the presence of conducted and/or radiated interference may be reduced.

All M221 Logic Controller system components meet European Community (CE) requirements for open equipment as defined by IEC/EN 61131-2. You must install them in an enclosure designed for the specific environmental conditions and to minimize the possibility of unintended contact with hazardous voltages. Use metal enclosures to improve the electromagnetic immunity of your M221 Logic Controller system. Use enclosures with a keyed locking mechanism to minimize unauthorized access.

Environmental Characteristics

All the M221 Logic Controller module components are electrically isolated between the internal electronic circuit and the input/output channels within the limits set forth and described by these environmental characteristics. For more information on electrical isolation, see the technical specifications of your particular controller found later in the current document. This equipment meets CE requirements as indicated in the table below. This equipment is intended for use in a Pollution Degree 2 industrial environment.

⚠ WARNING

UNINTENDED EQUIPMENT OPERATION

Do not exceed any of the rated values specified in the environmental and electrical characteristics tables.

Failure to follow these instructions can result in death, serious injury, or equipment damage.

The following table shows the general environmental characteristics:

Characteristic		Specification
Standard compliance	IEC/EN 61131-2 IEC/EN 61010-2-201	
Ambient operating temperature	Horizontal installation	–10...55 °C (14...131 °F)
	Vertical installation	–10...35 °C (14...95 °F)
Storage temperature		–25...70 °C (- 13...158 °F)

Characteristic		Specification
Relative humidity	Transport and storage	10...95 % (non-condensing)
	Operation	10...95 % (non-condensing)
Degree of pollution	IEC/EN 60664-1	2
Degree of protection	IEC/EN 61131-2	IP20 with protective covers in place
Machine Safety conformance	IEC/EN 61010-2-201	Yes
Corrosion immunity		Atmosphere free from corrosive gases
Operating altitude		0...2000 m (0...6560 ft)
Storage altitude		0...3000 m (0...9843 ft)
Vibration resistance	IEC/EN 61131-2 Panel mounting or mounted on a top hat section rail (DIN rail)	3.5 mm (0.13 in) fixed amplitude from 5...8.5 Hz 29.4 m/s^2 or 96.45 ft/s^2 (3 g_n) fixed acceleration from 8.7...150 Hz
Mechanical shock resistance		147 m/s^2 or 482.28 ft/s^2 (15 g_n) for a duration of 11 ms 98 m/s^2 or 32.15 ft/s^2 (10 g_n) for a duration of 11 ms (for M221 Logic Controller with relay outputs)

Electromagnetic Susceptibility

The M221 Logic Controller system meets electromagnetic susceptibility specifications as indicated in the following table:

Characteristic	Designed to specification	Range	
Electrostatic discharge	IEC/EN 61000-4-2	8 kV (air discharge) 4 kV (contact discharge)	
Radiated electromagnetic field	IEC/EN 61000-4-3	10 V/m (80...1000 MHz) 3 V/m (1.4...2 GHz) 1 V/m (2...3 GHz)	
Magnetic field	IEC/EN 61000-4-8	30 A/m 50 Hz, 60 Hz	
Fast transients burst	IEC/EN 61000-4-4	–	CM[1] and DM[2]
		AC/DC Power lines	2 kV
		Relay Outputs	2 kV
		24 Vdc I/Os	1 kV
		Analog I/Os	1 kV
		Communication line	1 kV

Characteristic	Designed to specification	Range		
Surge immunity	IEC/EN 61000-4-5 IEC/EN 61131-2	–	CM[1]	DM[2]
		DC Power lines	1 kV	0.5 kV
		AC Power lines	2 kV	1 kV
		Relay Outputs	2 kV	1 kV
		24 Vdc I/Os	1 kV	–
		Shielded cable (between shield and ground)	1 kV	–
Induced electromagnetic field	IEC/EN 61000-4-6	10 Vrms (0.15...80 MHz)		
Conducted emission	IEC/EN 55011 (IEC/CISPR Publication 11)	AC power line: ● 0.15...0.5 MHz: 79 dBµV/m QP / 66 dBµV/m AV ● 0.5...300 MHz: 73 dBµV/m QP / 60 dBµV/m AV		
		AC/DC power line: ● 10...150 kHz: 120...69 dBµV/m QP ● 150...1500 kHz: 79...63 dBµV/m QP ● 1.5...30 MHz: 63 dBµV/m QP		
Radiated emission	IEC/EN 55011 (IEC/CISPR Publication 11)	Class A, 10 m distance: ● 30...230 MHz: 40 dBµV/m QP ● 230...1000 MHz: 47 dBµV/m QP		

1 Common Mode
2 Differential Mode

Certifications and Standards

Introduction

The M221 Logic Controllers are designed to conform to the main national and international standards concerning electronic industrial control devices:

- IEC/EN 61131-2
- UL 508

The M221 Logic Controllers have obtained, or in the process of obtaining, the following conformity marks:

- CE

The M221 Logic Controllers comply with the main national and international Directives and Regulations concerning electronic industrial control devices:

- Europe RoHS:
  - Exemption annex III 7(a)
  - Exemption annex III 7(c)-I
  - Exemption annex III 34
- China RoHS regulations
- REACh v9

Section 3.2
M221 Logic Controller Installation

What Is in This Section?

This section contains the following topics:

Topic	Page
Installation and Maintenance Requirements	74
TM221C Logic Controller Mounting Positions and Clearances	77
TM221M Logic Controller Mounting Positions and Clearances	80
Top Hat Section Rail (DIN rail)	83
Installing and Removing the Controller with Expansions	86
Direct Mounting on a Panel Surface	89

Installation and Maintenance Requirements

Before Starting

Read and understand this chapter before beginning the installation of your system.

The use and application of the information contained herein require expertise in the design and programming of automated control systems. Only you, the user, machine builder or integrator, can be aware of all the conditions and factors present during installation and setup, operation, and maintenance of the machine or process, and can therefore determine the automation and associated equipment and the related safeties and interlocks which can be effectively and properly used. When selecting automation and control equipment, and any other related equipment or software, for a particular application, you must also consider any applicable local, regional or national standards and/or regulations.

Pay particular attention in conforming to any safety information, different electrical requirements, and normative standards that would apply to your machine or process in the use of this equipment.

Disconnecting Power

All options and modules should be assembled and installed before installing the control system on a mounting rail, onto a mounting plate or in a panel. Remove the control system from its mounting rail, mounting plate or panel before disassembling the equipment.

DANGER

HAZARD OF ELECTRIC SHOCK, EXPLOSION OR ARC FLASH

- Disconnect all power from all equipment including connected devices prior to removing any covers or doors, or installing or removing any accessories, hardware, cables, or wires except under the specific conditions specified in the appropriate hardware guide for this equipment.
- Always use a properly rated voltage sensing device to confirm the power is off where and when indicated.
- Replace and secure all covers, accessories, hardware, cables, and wires and confirm that a proper ground connection exists before applying power to the unit.
- Use only the specified voltage when operating this equipment and any associated products.

Failure to follow these instructions will result in death or serious injury.

Programming Considerations

⚠ WARNING

UNINTENDED EQUIPMENT OPERATION

- Only use software approved by Schneider Electric for use with this equipment.
- Update your application program every time you change the physical hardware configuration.

Failure to follow these instructions can result in death, serious injury, or equipment damage.

Operating Environment

This equipment has been designed to operate outside of any hazardous location. Only install this equipment in zones known to be free of a hazardous atmosphere.

⚠ DANGER

POTENTIAL FOR EXPLOSION

Install and use this equipment in non-hazardous locations only.

Failure to follow these instructions will result in death or serious injury.

⚠ WARNING

UNINTENDED EQUIPMENT OPERATION

Install and operate this equipment according to the conditions described in the Environmental Characteristics.

Failure to follow these instructions can result in death, serious injury, or equipment damage.

Installation Considerations

WARNING

UNINTENDED EQUIPMENT OPERATION

- Use appropriate safety interlocks where personnel and/or equipment hazards exist.
- Install and operate this equipment in an enclosure appropriately rated for its intended environment.
- Use the sensor and actuator power supplies only for supplying power to the sensors oraUNINTated4(r)-c6(

NOTE: JDYX2 or JDYX8 fuse types are UL-recognized and CSA approved.

TM221C Logic Controller Mounting Positions and Clearances

Introduction

This section describes the mounting positions for the TM221C Logic Controller .

NOTE: Keep adequate spacing for proper ventilation and to maintain the operating temperature specified in the Environmental Characteristics *(see page 69)*.

Correct Mounting Position

Whenever possible, the TM221C Logic Controller should be mounted horizontally on a vertical plane as shown in the figure below:

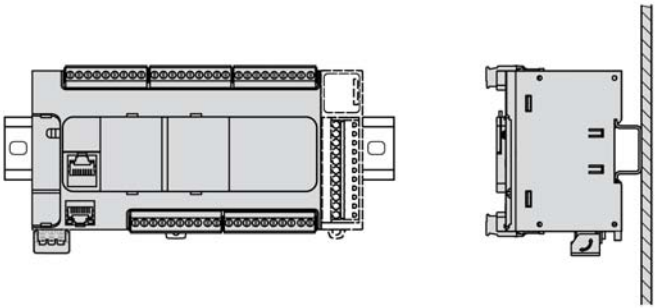

Acceptable Mounting Positions

The TM221C Logic Controller can also be mounted vertically with a temperature derating on a vertical plane as shown below.

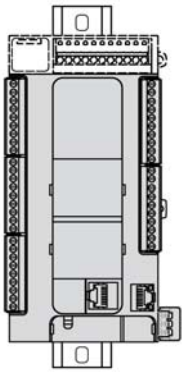

NOTE: Expansion modules must be mounted above the logic controller.

Incorrect Mounting Position

The TM221C Logic Controller should only be positioned as shown in Correct Mounting Position *(see page 77)* figure. The figures below show the incorrect mounting positions.

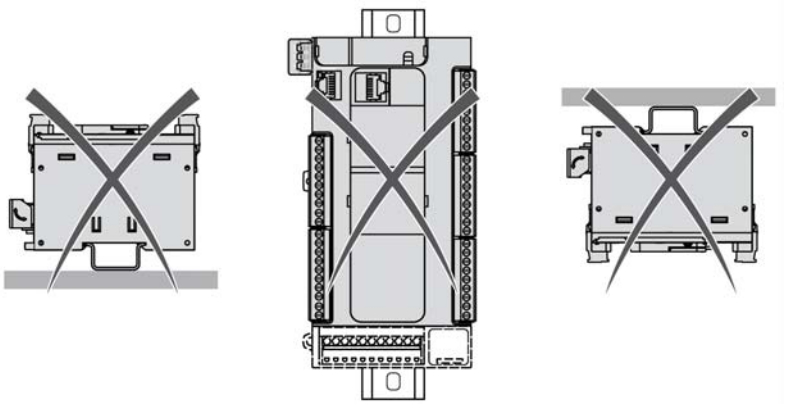

Minimum Clearances

⚠ WARNING

UNINTENDED EQUIPMENT OPERATION

- Place devices dissipating the most heat at the top of the cabinet and ensure adequate ventilation.
- Avoid placing this equipment next to or above devices that might cause overheating.
- Install the equipment in a location providing the minimum clearances from all adjacent structures and equipment as directed in this document.
- Install all equipment in accordance with the specifications in the related documentation.

Failure to follow these instructions can result in death, serious injury, or equipment damage.

The M221 Logic Controller has been designed as an IP20 product and must be installed in an enclosure. Clearances must be respected when installing the product.

There are 3 types of clearances between:

- The M221 Logic Controller and all sides of the cabinet (including the panel door).
- The M221 Logic Controller terminal blocks and the wiring ducts. This distance reduces electromagnetic interference between the controller and the wiring ducts.
- The M221 Logic Controller and other heat generating devices installed in the same cabinet.

The following figure shows the minimum clearances that apply to all TM221C Logic Controller references:

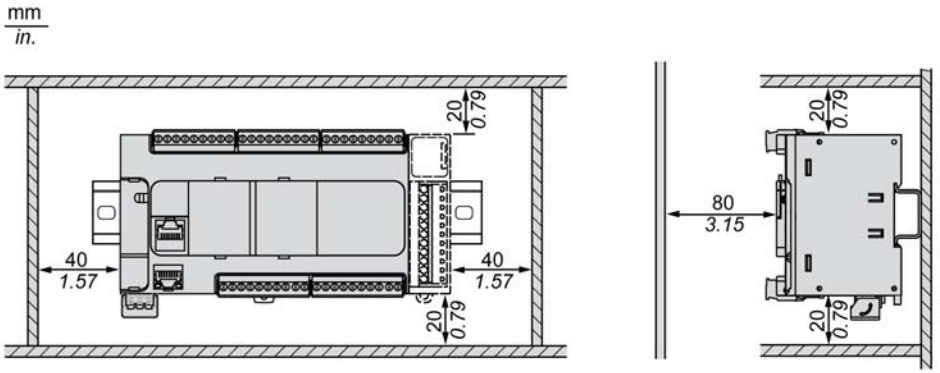

TM221M Logic Controller Mounting Positions and Clearances

Introduction

This section describes the mounting positions for the M221 Logic Controller.

NOTE: Keep adequate spacing for proper ventilation and to maintain the operating temperature specified in the Environmental Characteristics *(see page 69)*.

Correct Mounting Position

To obtain optimal operating characteristics, the M221 Logic Controller should be mounted horizontally on a vertical plane as shown in the figure below:

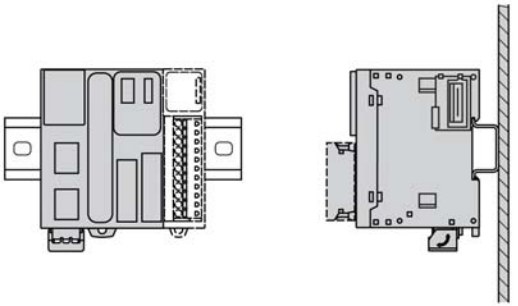

Acceptable Mounting Positions

The M221 Logic Controller can also be mounted vertically on a vertical plane as shown below.

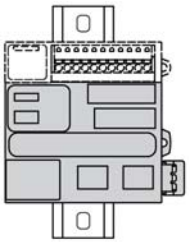

NOTE: Expansion modules must mounted above the controller.

Incorrect Mounting Position

The M221 Logic Controller should only be positioned as shown in the Correct Mounting Position *(see page 80)* figure. The figures below show the incorrect mounting positions.

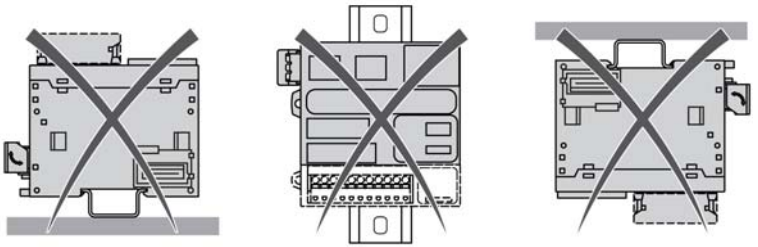

Minimum Clearances

⚠ WARNING

UNINTENDED EQUIPMENT OPERATION

- Place devices dissipating the most heat at the top of the cabinet and ensure adequate ventilation.
- Avoid placing this equipment next to or above devices that might cause overheating.
- Install the equipment in a location providing the minimum clearances from all adjacent structures and equipment as directed in this document.
- Install all equipment in accordance with the specifications in the related documentation.

Failure to follow these instructions can result in death, serious injury, or equipment damage.

The M221 Logic Controller has been designed as an IP20 product and must be installed in an enclosure. Clearances must be respected when installing the product.

There are 3 types of clearances to consider:

- The M221 Logic Controller and all sides of the cabinet (including the panel door).
- The M221 Logic Controller terminal blocks and the wiring ducts to help reduce potential electromagnetic interference between the controller and the duct wiring.
- The M221 Logic Controller and other heat generating devices installed in the same cabinet.

The following figure shows the minimum clearances that apply to all M221 Logic Controller references:

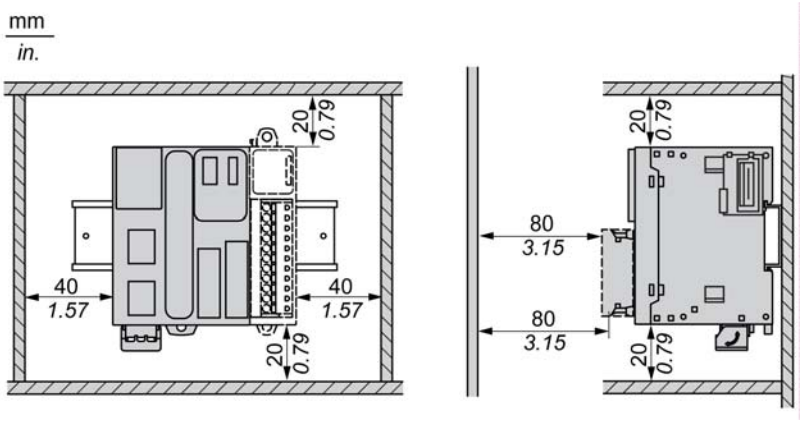

Top Hat Section Rail (DIN rail)

Dimensions of Top Hat Section Rail DIN Rail

You can mount the controller or receiver and its expansions on a 35 mm (1.38 in.) top hat section rail (DIN rail). It can be attached to a smooth mounting surface or suspended from a EIA rack or mounted in a NEMA cabinet.

Symmetric Top Hat Section Rails (DIN Rail)

The following illustration and table show the references of the top hat section rails (DIN rail) for the wall-mounting range:

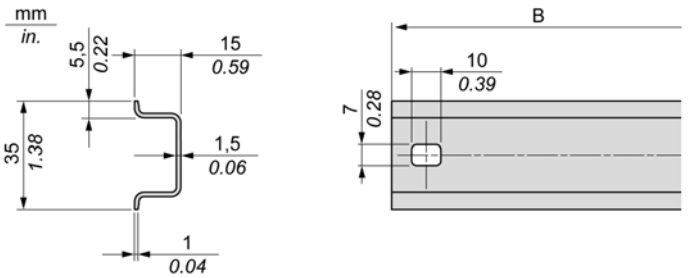

Reference	Type	Rail Length (B)
NSYSDR50A	A	450 mm (17.71 in.)
NSYSDR60A	A	550 mm (21.65 in.)
NSYSDR80A	A	750 mm (29.52 in.)
NSYSDR100A	A	950 mm (37.40 in.)

The following illustration and table show the references of the symmetric top hat section rails (DIN rail) for the metal enclosure range:

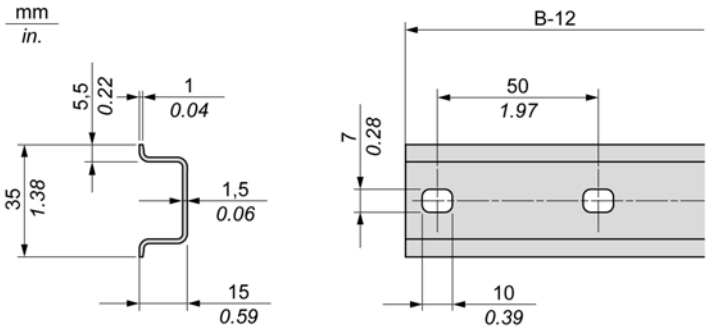

Reference	Type	Rail Length (B-12 mm)
NSYSDR60	A	588 mm (23.15 in.)
NSYSDR80	A	788 mm (31.02 in.)
NSYSDR100	A	988 mm (38.89 in.)
NSYSDR120	A	1188 mm (46.77 in.)

The following illustration and table shows the references of the symmetric top hat section rails (DIN rail) of 2000 mm (78.74 in.):

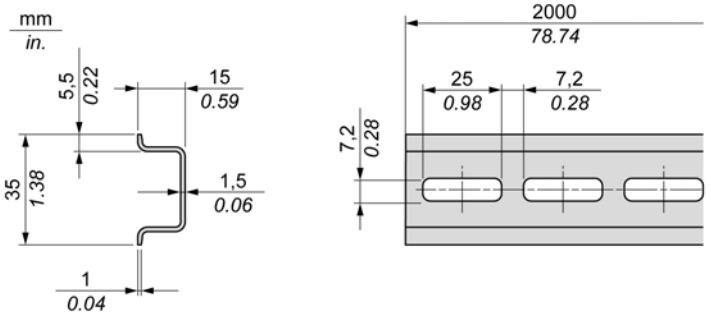

Reference	Type	Rail Length
NSYSDR200[1]	A	2000 mm (78.74 in.)
NSYSDR200D[2]	A	
1 Unperforated galvanized steel **2** Perforated galvanized steel		

Double-Profile Top Hat Section Rails (DIN rail)

The following illustration and table show the references of the double-profile top hat section rails (DIN rails) for the wall-mounting range:

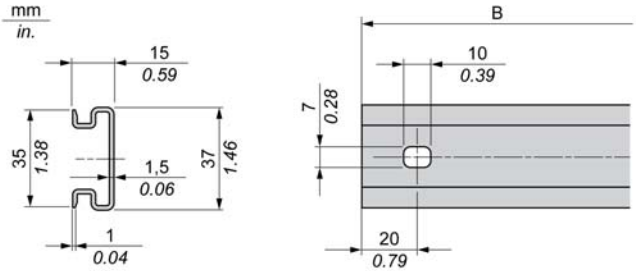

Reference	Type	Rail Length (B)
NSYDPR25	W	250 mm (9.84 in.)
NSYDPR35	W	350 mm (13.77 in.)
NSYDPR45	W	450 mm (17.71 in.)
NSYDPR55	W	550 mm (21.65 in.)
NSYDPR65	W	650 mm (25.60 in.)
NSYDPR75	W	750 mm (29.52 in.)

The following illustration and table show the references of the double-profile top hat section rails (DIN rail) for the floor-standing range:

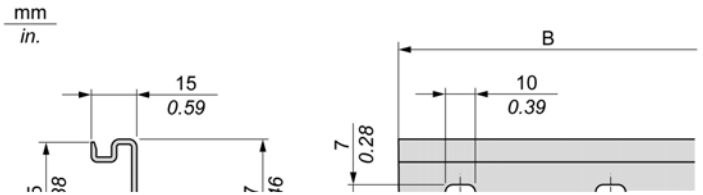

Reference	Type	Rail Length (B)
NSYDPR60	F	588 mm (23.15 in.)
NSYDPR80	F	788 mm (31.02 in.)
NSYDPR100	F	988 mm (38.89 in.)
NSYDPR120	F	1188 mm (46.77 in.)

Installing and Removing the Controller with Expansions

Overview

This section describes how to install and remove the controller with its expansion modules from a top hat section rail (DIN rail).

To assemble expansion modules to a controller or receiver module, or to other modules, refer to the respective expansion modules hardware guide(s).

Installing a Controller with its Expansions on a DIN Rail

The following procedure describes how to install a controller with its expansion modules on a top hat section rail (DIN rail):

Step	Action
1	Fasten the top hat section rail (DIN rail) to a panel surface using screws.
2	Position the top groove of the controller and its expansion modules on the top edge of the DIN rail and press the assembly against the top hat section rail (DIN rail) until you hear the top hat section rail (DIN rail) clip snap into place. On TM221C Logic Controller: 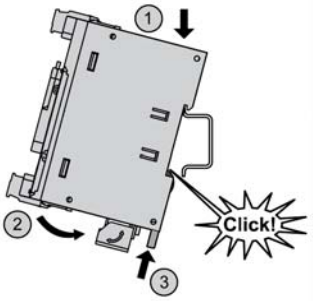 On TM221M Logic Controller: 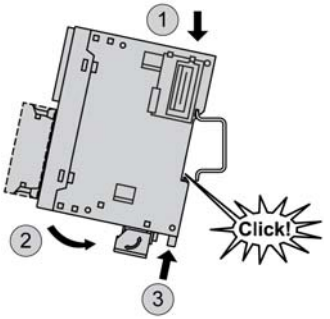

Step	Action
3	Place 2 terminal block end clamps on both sides of the controller and expansion module assembly. 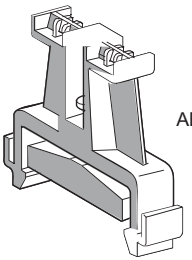 AB1AB8P35 **NOTE:** Type ABB8P35 or equivalent terminal block end clamps help minimize sideways movement and improve the shock and vibration characteristics of the controller and expansion module assembly.

Removing a Controller with its Expansions from a Top Hat Section Rail (DIN Rail)

The following procedure describes how to remove a controller with its expansion modules from a top hat section rail (DIN rail):

Step	Action
1	Remove all power from your controller and expansion modules.

Step	Action
2	Insert a flat screwdriver into the slot of the top hat section rail (DIN rail) clip. On TM221C Logic Controller: 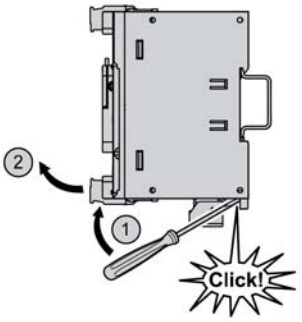 On TM221M Logic Controller: 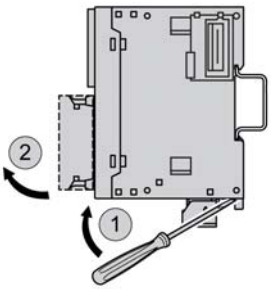
3	Pull down the DIN rail clip.
4	Pull the controller and its expansion modules from the top hat section rail (DIN rail) from the bottom.

Direct Mounting on a Panel Surface

Overview

This section shows how to install M221 Logic Controller using the Panel Mounting Kit. This section also provides mounting hole layout for all modules.

Installing the Panel Mount Kit

The following procedure shows how to install a mounting strip:

Step	Action
1	Insert the mounting strip TMAM2 into the slot at the top of the module. 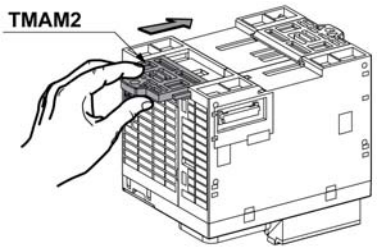

Mounting Hole Layout

The following diagram shows the mounting hole layout for TM221C Logic Controller with 16 I/O channels:

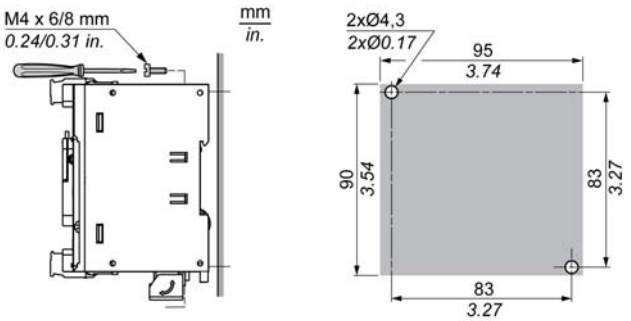

The following diagram shows the mounting hole layout for TM221C Logic Controller with 24 I/O channels:

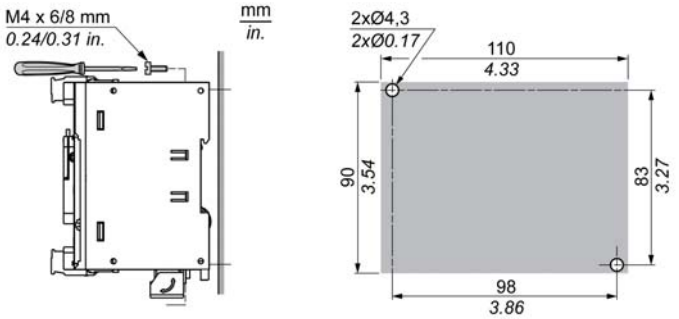

The following diagram shows the mounting hole layout for TM221C Logic Controller with 40 I/O channels:

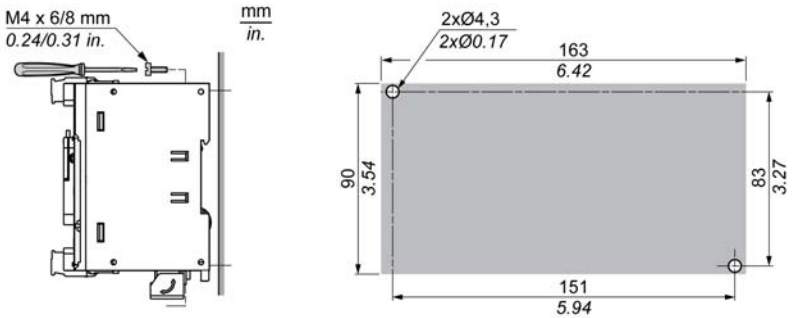

The following diagram shows the mounting hole layout for TM221M Logic Controller:

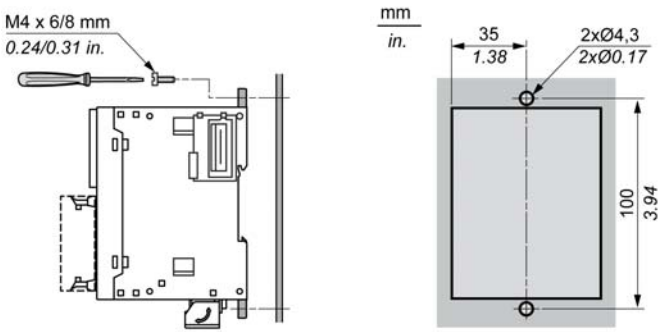

Section 3.3
M221 Electrical Requirements

What Is in This Section?

This section contains the following topics:

Topic	Page
Wiring Best Practices	92
DC Power Supply Characteristics and Wiring	98
AC Power Supply Characteristics and Wiring	102
Grounding the M221 System	105

Wiring Best Practices

Overview

This section describes the wiring guidelines and associated best practices to be respected when using the M221 Logic Controller system.

⚠⚠ DANGER

HAZARD OF ELECTRIC SHOCK, EXPLOSION OR ARC FLASH

- Disconnect all power from all equipment including connected devices prior to removing any covers or doors, or installing or removing any accessories, hardware, cables, or wires except under the specific conditions specified in the appropriate hardware guide for this equipment.
- Always use a properly rated voltage sensing device to confirm the power is off where and when indicated.
- Replace and secure all covers, accessories, hardware, cables, and wires and confirm that a proper ground connection exists before applying power to the unit.
- Use only the specified voltage when operating this equipment and any associated products.

Failure to follow these instructions will result in death or serious injury.

⚠ WARNING

LOSS OF CONTROL

- The designer of any control scheme must consider the potential failure modes of control paths and, for certain critical control functions, provide a means to achieve a safe state during and after a path failure. Examples of critical control functions are emergency stop and overtravel stop, power outage and restart.
- Separate or redundant control paths must be provided for critical control functions.
- System control paths may include communication links. Consideration must be given to the implications of unanticipated transmission delays or failures of the link.
- Observe all accident prevention regulations and local safety guidelines.[1]
- Each implementation of this equipment must be individually and thoroughly tested for proper operation before being placed into service.

Failure to follow these instructions can result in death, serious injury, or equipment damage.

[1] For additional information, refer to NEMA ICS 1.1 (latest edition), "Safety Guidelines for the Application, Installation, and Maintenance of Solid State Control" and to NEMA ICS 7.1 (latest edition), "Safety Standards for Construction and Guide for Selection, Installation and Operation of Adjustable-Speed Drive Systems" or their equivalent governing your particular location.

Wiring Guidelines

The following rules must be applied when wiring a M221 Logic Controller system:

- I/O and communication wiring must be kept separate from the power wiring. Route these 2 types of wiring in separate cable ducting.
- Verify that the operating conditions and environment are within the specification values.
- Use proper wire sizes to meet voltage and current requirements.
- Use copper conductors (required).
- Use twisted pair, shielded cables for analog, and/or fast I/O.
- Use twisted pair, shielded cables for networks, and fieldbus.

Use shielded, properly grounded cables for all analog and high-speed inputs or outputs and communication connections. If you do not use shielded cable for these connections, electromagnetic interference can cause signal degradation. Degraded signals can cause the controller or attached modules and equipment to perform in an unintended manner.

⚠ WARNING

UNINTENDED EQUIPMENT OPERATION

- Use shielded cables for all fast I/O, analog I/O and communication signals.
- Ground cable shields for all analog I/O, fast I/O and communication signals at a single point[1].
- Route communication and I/O cables separately from power cables.

Failure to follow these instructions can result in death, serious injury, or equipment damage.

[1]Multipoint grounding is permissible if connections are made to an equipotential ground plane dimensioned to help avoid cable shield damage in the event of power system short-circuit currents.

For more details, refer to Grounding Shielded Cables *(see page 105)*.

NOTE: Surface temperatures may exceed 60° C. To conform to IEC 61010 standards, route primary wiring (wires connected to power mains) separately and apart from secondary wiring (extra low voltage wiring coming from intervening power sources). If that is not possible, double insulation is required such as conduit or cable gains.

Rules for Removable Screw Terminal Block

The following tables show the cable types and wire sizes for a **3.81 pitch** removable screw terminal block (I/Os and power supply):

mm / in. 9 / 0.35								
mm²	0.14…1.5	0.14…1.5	0.25…1.5	0.25…0.5	2 x 0.14…0.5	2 x 0.14…0.75	2 x 0.25…0.34	2 x 0.5
AWG	*25…16*	*25…16*	*23...16*	*23...20*	*2 x 25…20*	*2 x 25…19*	*2 x 24…22*	*2 x 20*

Ø 2,5 mm (*0.1 in.*)		N•m	0.22...0.25
		lb-in	*1.95...2.21*

The following tables show the cable types and wire sizes for a **5.08 pitch** removable screw terminal block (I/Os and power supply):

mm / in. 7 / 0.28								
mm²	0.2…2.5	0.2…2.5	0.25…2.5	0.25…2.5	2 x 0.2…1	2 x 0.2…1.5	2 x 0.25…1	2 x 0.5...1.5
AWG	24…14	24…14	23…14	23…14	2 x 24…17	2 x 24…16	2 x 23…17	2 x 20…16

Ø 3,5 mm (*0.14 in.*)		N•m	0.5...0.6
		lb-in	*4.42...5.31*

The use of copper conductors is required.

⚠ DANGER

LOOSE WIRING CAUSES ELECTRIC SHOCK

- Tighten connections in conformance with the torque specifications.
- Do not insert more than one wire per connector of the terminal block without the cable ends specified above.

Failure to follow these instructions will result in death or serious injury.

⚠ DANGER

FIRE HAZARD

- Use only the recommended wire sizes for the current capacity of the I/O channels and power supplies.
- For relay output (2 A) wiring, use conductors of at least 0.5 mm2 (AWG 20) with a temperature rating of at least 80 °C (176 °F).
- For common conductors of relay output wiring (7 A), or relay output wiring greater than 2 A, use conductors of at least 1.0 mm2 (AWG 16) with a temperature rating of at least 80 °C (176 °F).

Failure to follow these instructions will result in death or serious injury.

Rules for Removable Spring Terminal Block

The following tables show the cable types and wire sizes for a **3.81 pitch** removable spring terminal block (I/Os and power supply):

mm / in. 9 / 0.35				
mm²	0.2…1.5	0.2…1.5	0.25…1.5	0.25…0.75
AWG	*24…16*	*24…16*	*23...16*	*23...19*

The following tables show the cable types and wire sizes for a **5.08 pitch** removable spring terminal block (I/Os and power supply):

mm / in. 10 / 0.39					
mm²	0.2…2.5	0.2…2.5	0.25…2.5	0.25…2.5	2 x 0.5...1
AWG	*24…14*	*24…14*	*23...14*	*23...14*	*2 x 20...17*

The use of copper conductors is required.

⚠ DANGER

FIRE HAZARD

- Use only the recommended wire sizes for the current capacity of the I/O channels and power supplies.
- For relay output (2 A) wiring, use conductors of at least 0.5 mm2 (AWG 20) with a temperature rating of at least 80 °C (176 °F).
- For common conductors of relay output wiring (7 A), or relay output wiring greater than 2 A, use conductors of at least 1.0 mm2 (AWG 16) with a temperature rating of at least 80 °C (176 °F).

Failure to follow these instructions will result in death or serious injury.

The spring clamp connectors of the terminal block are designed for only one wire or one cable end. Two wires to the same connector must be installed with a double wire cable end to help prevent loosening.

⚠ DANGER

LOOSE WIRING CAUSES ELECTRIC SHOCK

Do not insert more than one wire per connector of the terminal block without a double wire cable end.

Failure to follow these instructions will result in death or serious injury.

Removing the I/O Terminal Block

The following figure shows the removal of the I/O terminal block from the TM221C Logic Controller:

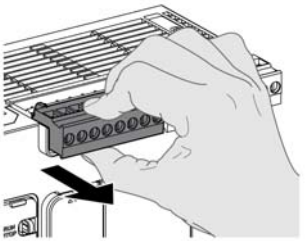

Protecting Outputs from Inductive Load Damage

Depending on the load, a protection circuit may be needed for the outputs on the controllers and certain modules. Inductive loads using DC voltages may create voltage reflections resulting in overshoot that will damage or shorten the life of output devices.

⚠ CAUTION

OUTPUT CIRCUIT DAMAGE DUE TO INDUCTIVE LOADS

Use an appropriate external protective circuit or device to reduce the risk of inductive direct current load damage.

Failure to follow these instructions can result in injury or equipment damage.

If your controller or module contains relay outputs, these types of outputs can support up to 240 Vac. Inductive damage to these types of outputs can result in welded contacts and loss of control. Each inductive load must include a protection device such as a peak limiter, RC circuit or flyback diode. Capacitive loads are not supported by these relays.

⚠ WARNING

RELAY OUTPUTS WELDED CLOSED

- Always protect relay outputs from inductive alternating current load damage using an appropriate external protective circuit or device.
- Do not connect relay outputs to capacitive loads.

Failure to follow these instructions can result in death, serious injury, or equipment damage.

Protective circuit A: this protection circuit can be used for both AC and DC load power circuits.

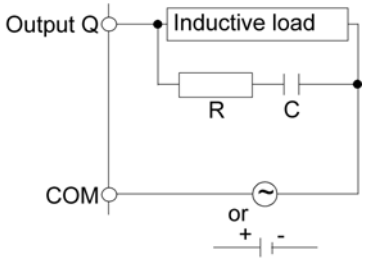

C Value from 0.1 to 1 µF
R Resistor of approximately the same resistance value as the load

Protective circuit B: this protection circuit can be used for DC load power circuits.

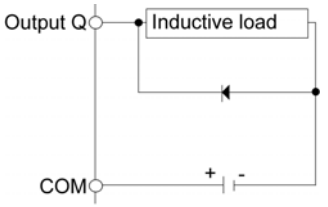

Use a diode with the following ratings:

- Reverse withstand voltage: power voltage of the load circuit x 10.
- Forward current: more than the load current.

Protective circuit C: this protection circuit can be used for both AC and DC load power circuits.

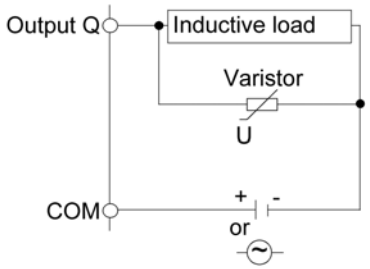

In applications where the inductive load is switched on and off frequently and/or rapidly, ensure that the continuous energy rating (J) of the varistor exceeds the peak load energy by 20 % or more.

DC Power Supply Characteristics and Wiring

Overview

This section provides the characteristics and the wiring diagrams of the DC power supply.

DC Power Supply Voltage Range

If the specified voltage range is not maintained, outputs may not switch as expected. Use appropriate safety interlocks and voltage monitoring circuits.

⚠ DANGER

FIRE HAZARD

- Use only the recommended wire sizes for the current capacity of the I/O channels and power supplies.
- For relay output (2 A) wiring, use conductors of at least 0.5 mm2 (AWG 20) with a temperature rating of at least 80 °C (176 °F).
- For common conductors of relay output wiring (7 A), or relay output wiring greater than 2 A, use conductors of at least 1.0 mm2 (AWG 16) with a temperature rating of at least 80 °C (176 °F).

Failure to follow these instructions will result in death or serious injury.

⚠ WARNING

UNINTENDED EQUIPMENT OPERATION

Do not exceed any of the rated values specified in the environmental and electrical characteristics tables.

Failure to follow these instructions can result in death, serious injury, or equipment damage.

DC Power Supply Requirements

The M221 Logic Controller and associated I/O (TM2,TM3 and embedded I/O) require power supplies with a nominal voltage of 24 Vdc. The 24 Vdc power supplies must be rated Safety Extra Low Voltage (SELV) or Protective Extra Low Voltage (PELV) according to IEC 61140. These power supplies are isolated between the electrical input and output circuits of the power supply.

⚠ WARNING

POTENTIAL OF OVERHEATING AND FIRE

- Do not connect the equipment directly to line voltage.
- Use only isolating PELV or SELV power supplies to supply power to the equipment[1].

Failure to follow these instructions can result in death, serious injury, or equipment damage.

[1]For compliance to UL (Underwriters Laboratories) requirements, the power supply must also be of a type Class II with a maximum power output availability of less than 100 VA (approximately 4 A at nominal voltage). A Class II circuit requires dry indoor use only in non-hazardous locations, and must be grounded. You must separate Class II circuits from other circuits. If a non-Class II power source is used, either power supply or transformer, you must impose a current limiting device such as a fuse or a circuit breaker with a maximum rating of 4 A, but never exceeding the limits indicated in the electric characteristics and wiring diagrams for this equipment. If the indicated rating of the electrical characteristics or wiring diagrams are greater than 4 A, multiple Class II power supplies may be used.

Controller DC Characteristics

The following table shows the DC power supply characteristics:

Characteristic			Value
Rated voltage			24 Vdc
Power supply voltage range			20.4...28.8 Vdc
Power interruption time			10 ms at 24 Vdc
Maximum inrush current			35 A
Maximum power consumption	TM221C16T	with 4 expansion modules	10 W
	TM221CE16T		11 W
	TM221C24T	with 7 expansion modules	13 W
	TM221CE24T		14 W
	TM221C40T		16 W
	TM221CE40T		17 W

Characteristic			Value
Maximum power consumption	TM221M16R•	with 7 expansion modules	22.5 W
	TM221ME16R•		23.3 W
	TM221M16T•		22 W
	TM221ME16T•		22.9 W
	TM221M32TK		22.3 W
	TM221ME32TK		23.2 W
Isolation	between DC power supply and internal logic	TM221C Logic Controller	500 Vac
		TM221M Logic Controller	Not isolated
	between DC power supply and protective earth ground (PE)		500 Vac

Power interruption

The TM221M Logic Controller must be supplied by an external 24 V power supply equipment. During power interruptions, the TM221M Logic Controller, associated to the suitable power supply, is able to continue normal operation for a minimum of 10 ms as specified by IEC standards.

When planning the management of the power supplied to the controller, you must consider the power interruption duration due to the fast cycle time of the controller.

There could potentially be many scans of the logic and consequential updates to the I/O image table during the power interruption, while there is no external power supplied to the inputs, the outputs or both depending on the power system architecture and power interruption circumstances.

⚠ WARNING

UNINTENDED EQUIPMENT OPERATION

- Individually monitor each source of power used in the controller system including input power supplies, output power supplies and the power supply to the controller to allow appropriate system shutdown during power system interruptions.
- The inputs monitoring each of the power supply sources must be unfiltered inputs.

Failure to follow these instructions can result in death, serious injury, or equipment damage.

DC Power Supply Wiring Diagram

The following figure shows the power supply terminal block removal procedure:

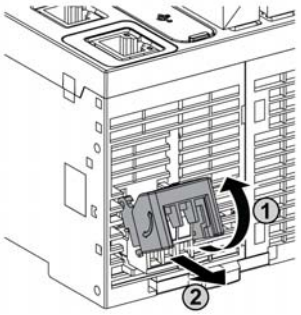

The following figure shows the wiring of the DC power supply:

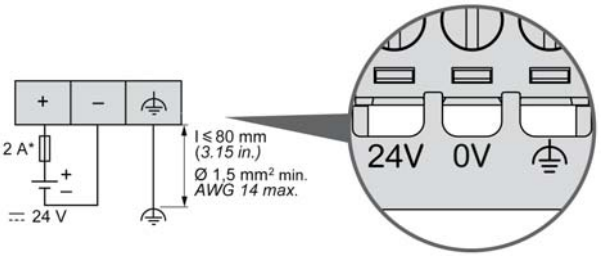

* Type T fuse

For more information, refer to the 5.08 pitch Rules for Removable Screw Terminal block (*see page 93*).

AC Power Supply Characteristics and Wiring

Overview

This section provides the wiring diagrams and the characteristics of the AC power supply.

AC Power Supply Voltage Range

If the specified voltage range is not maintained, outputs may not switch as expected. Use appropriate safety interlocks and voltage monitoring circuits.

⚠ DANGER

FIRE HAZARD

- Use only the recommended wire sizes for the current capacity of the I/O channels and power supplies.
- For relay output (2 A) wiring, use conductors of at least 0.5 mm2 (AWG 20) with a temperature rating of at least 80 °C (176 °F).
- For common conductors of relay output wiring (7 A), or relay output wiring greater than 2 A, use conductors of at least 1.0 mm2 (AWG 16) with a temperature rating of at least 80 °C (176 °F).

Failure to follow these instructions will result in death or serious injury.

⚠ WARNING

UNINTENDED EQUIPMENT OPERATION

Do not exceed any of the rated values specified in the environmental and electrical characteristics tables.

Failure to follow these instructions can result in death, serious injury, or equipment damage.

Controller AC Characteristics

The following table shows the AC power supply characteristics:

Characteristic		Value
Voltage	rated	100...240 Vac
	limit (including ripple)	85...264 Vac
Frequency		50/60 Hz
Power interruption time		10 ms at 100 Vac

Characteristic			Value
Maximum inrush current	at 240 Vac		40 A
Maximum power consumption at 100...240 Vac	TM221C16R	with 4 expansion modules	46 VA
	TM221CE16R		49 VA
	TM221C24R	with 7 expansion modules	55 VA
	TM221CE24R		58 VA
	TM221C40R		67 VA
	TM221CE40R		70 VA
Isolation	between AC power supply and internal logic		2300 Vac
	between AC power supply and protective earth ground (PE)		1500 Vac

Power interruption

The duration of power interruptions where the M221 Logic Controller is able to continue normal operation varies depending upon the load to the power supply of the controller, but generally a minimum of 10 ms is maintained as specified by IEC standards.

If there is a minimum load on the controller power supply, the interruption can be as long as 400 ms.

When planning the management of the power supplied to the controller, you must consider the duration due to the fast cycle time.

There could potentially be many scans of the logic and consequential updates to the I/O image table during the power interruption, while there is no external power supplied to the inputs, the outputs or both depending on the power system architecture and power interruption circumstances.

⚠ WARNING

UNINTENDED EQUIPMENT OPERATION

- Individually monitor each source of power used in the Modicon M221 Logic Controller system including input power supplies, output power supplies and the power supply to the controller to allow appropriate system shutdown during power system interruptions.
- The inputs monitoring each of the power supply sources must be unfiltered inputs.

Failure to follow these instructions can result in death, serious injury, or equipment damage.

AC Power Supply Wiring Diagram

The following figure shows the power supply terminal block removal procedure:

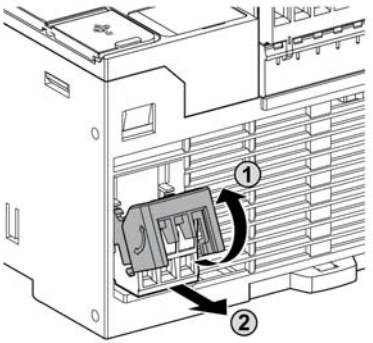

The following figure shows the wiring of the AC power supply:

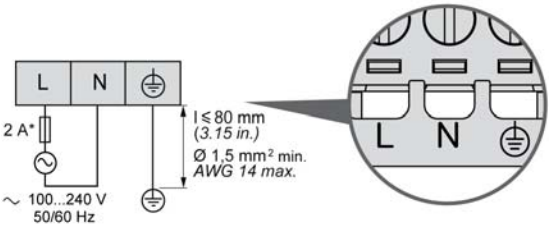

* Use an external, slow-blow, type T fuse.

Grounding the M221 System

Overview

To help minimize the effects of electromagnetic interference, cables carrying the fast I/O, analog I/O, and field bus communication signals must be shielded.

⚠ WARNING

UNINTENDED EQUIPMENT OPERATION

- Use shielded cables for all fast I/O, analog I/O, and communication signals.
- Ground cable shields for all fast I/O, analog I/O, and communication signals at a single point[1].
- Route communications and I/O cables separately from power cables.

Failure to follow these instructions can result in death, serious injury, or equipment damage.

[1]Multipoint grounding is permissible if connections are made to an equipotential ground plane dimensioned to help avoid cable shield damage in the event of power system short-circuit currents.

The use of shielded cables requires compliance with the following wiring rules:

- For protective ground connections (PE), metal conduit or ducting can be used for part of the shielding length, provided there is no break in the continuity of the ground connections. For functional ground (FE), the shielding is intended to attenuate electromagnetic interference and the shielding must be continuous for the length of the cable. If the purpose is both functional and protective, as is often the case for communication cables, the cable must have continuous shielding.
- Wherever possible, keep cables carrying one type of signal separate from the cables carrying other types of signals or power.

Protective Ground (PE) on the Backplane

The protective ground (PE) is connected to the conductive backplane by a heavy-duty wire, usually a braided copper cable with the maximum allowable cable section.

Shielded Cables Connections

Cables carrying the fast I/O, analog I/O, and field bus communication signals must be shielded. The shielding must be securely connected to ground. The fast I/O and analog I/O shields may be

Step	Description	
2	Attach the cable to the conductive backplane plate by attaching the grounding clamp to the stripped part of the shielding as close as possible to the M221 Logic Controller system base.	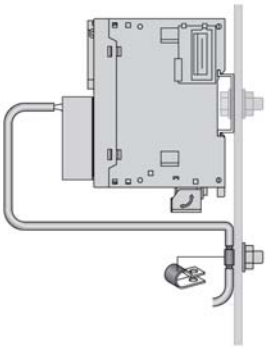

NOTE: The shielding must be clamped securely to the conductive backplane to ensure a good contact.

Functional Ground (FE) Cable Shielding

To connect the shield of a cable through the Grounding Bar:

Step	Description	
1	Install the Grounding Bar directly on the conductive backplane below the M221 Logic Controller system as illustrated.	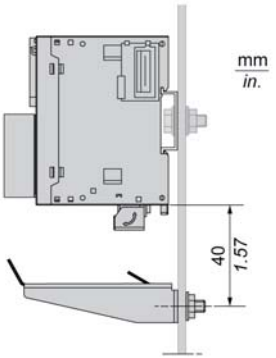
2	Strip the shielding for a length of 15 mm (0.59 in.	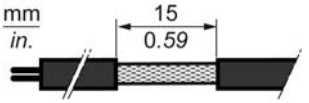

Step	Description	
3	Tightly clamp on the blade connector **(1)** using nylon fastener **(2)**(width 2.5...3 mm (0.1...0.12 in.)) and appropriate tool.	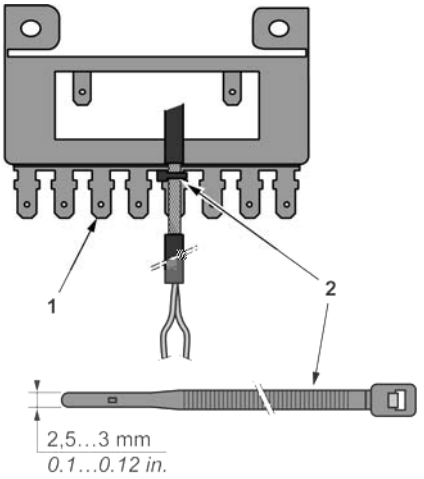

NOTE: Use the TM2XMTGB Grounding Bar for Functional Ground (FE) connections.

Part II
Modicon TM221C Logic Controller

What Is in This Part?

This part contains the following chapters:

Chapter	Chapter Name	Page
4	TM221C16R	111
5	TM221CE16R	115
6	TM221C16T	119
7	TM221CE16T	123
8	TM221C24R	127
9	TM221CE24R	131
10	TM221C24T	135
11	TM221CE24T	139
12	TM221C40R	143
13	TM221CE40R	149
14	TM221C40T	155
15	TM221CE40T	161
16	Embedded I/O Channels	167

Chapter 4
TM221C16R

TM221C16R Presentation

Overview

The following features are integrated into the TM221C16R logic controller:

- 9 digital inputs
  - 4 fast inputs (HSC)
  - 5 regular inputs
- 7 digital outputs
  - 7 relay outputs
- 2 analog inputs
- Communication port
  - 1 serial line port
  - 1 USB mini-B programming port

The following figure shows the different components of the logic controllers:

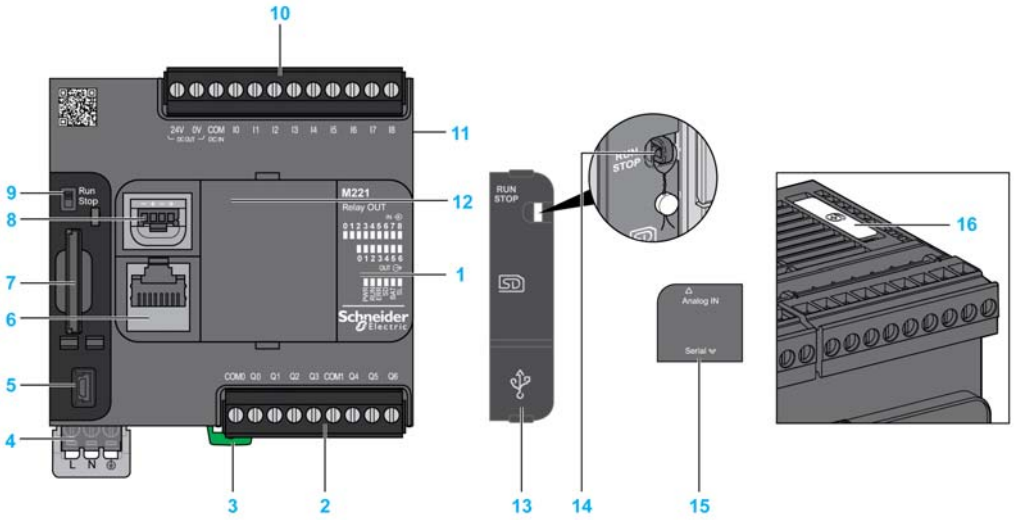

N°	Description	Refer to
1	Status LEDs	–
2	Output removable terminal block	Rules for Removable Screw Terminal Block *(see page 93)*
3	Clip-on lock for 35 mm (1.38 in.) top hat section rail (DIN-rail)	DIN Rail *(see page 83)*
4	100...240 Vac power supply	Power supply *(see page 104)*
5	USB mini-B programming port / For terminal connection to a programming PC (SoMachine Basic)	USB mini-B programming port *(see page 328)*
6	Serial line port 1 / RJ45 connector (RS-232 or RS-485)	Serial line 1 *(see page 333)*
7	SD Card slot	SD Card Slot *(see page 62)*
8	2 analog inputs	Analog Inputs *(see page 195)*
9	Run/Stop switch	Run/Stop switch *(see page 60)*
10	Input removable terminal block	Rules for Removable Screw Terminal Block *(see page 93)*
11	I/O expansion connector	–
12	Cartridge slot	–
13	Protective cover (SD Card slot, Run/Stop switch and USB mini-B programming port)	–
14	Locking hook	–
15	Removable analog inputs cover	–
16	Battery holder	Installing and Replacing the Battery *(see page 49)*

Status LEDs

The following figure shows the status LEDs:

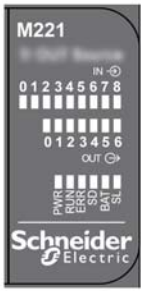

The following table describes the status LEDs:

Label	Function Type	Color	Status	Description		
				Controller States[1]	**Prg Port Communication**	**Application Execution**
PWR	Power	Green	On	Indicates that power is applied.		
			Off	Indicates that power is removed.		
RUN	Machine Status	Green	On	Indicates that the controller is running a valid application.		
			Flashing	Indicates that the controller has a valid application that is stopped.		
			Off	Indicates that the controller is not programmed		
ERR	Error	Red	On*	EXCEPTION	Restricted	NO
			Flashing (with RUN status LED Off)	INTERNAL ERROR	Restricted	NO
			Slow flash	Minor error detected	Yes	Depends on the RUN status LED
			1 single flash	No application	Yes	Yes
SD	SD Card Access *(see page 62)*	Green	On	Indicates that the SD card is being accessed		
			Flashing	Indicates that an error was detected during the SD card operation.		
			Off	Indicates no access (idle) or no card is present.		
BAT	Battery *(see page 48)*	Red	On	Indicates that the battery needs to be replaced.		
			Flashing	Indicates that the battery charge is low.		
			Off	Indicates that the battery is OK.		
SL	Serial line 1 *(see page 333)*	Green	On	Indicates the status of Serial line 1		
			Flashing	Indicates activity on Serial line 1		
			Off	Indicates no serial communication		

* ERR LED is also On during booting process

NOTE: For information about the LEDs integrated into the Ethernet connector, refer to Ethernet Status LEDs *(see page 332)*

Dimensions

The following figure show the external dimensions of the logic controller:

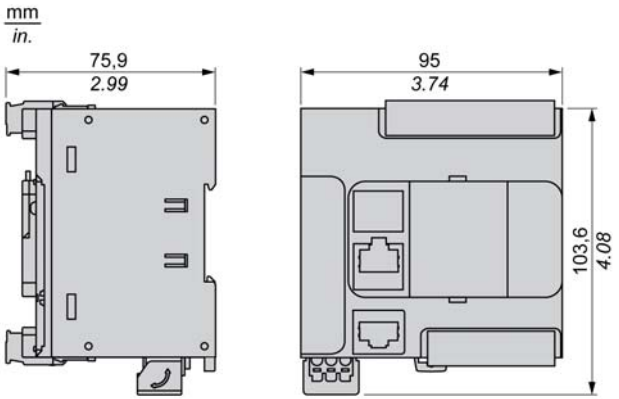

Chapter 5
TM221CE16R

TM221CE16R Presentation

Overview

The following features are integrated into the TM221CE16R logic controller:

- 9 digital inputs
  - 4 fast inputs (HSC)
  - 5 regular inputs
- 7 digital outputs
  - 7 relay outputs
- 2 analog inputs
- Communication port
  - 1 serial line port
  - 1 USB mini-B programming port
  - 1 Ethernet port

Description

The following figure shows the different components of the logic controller:

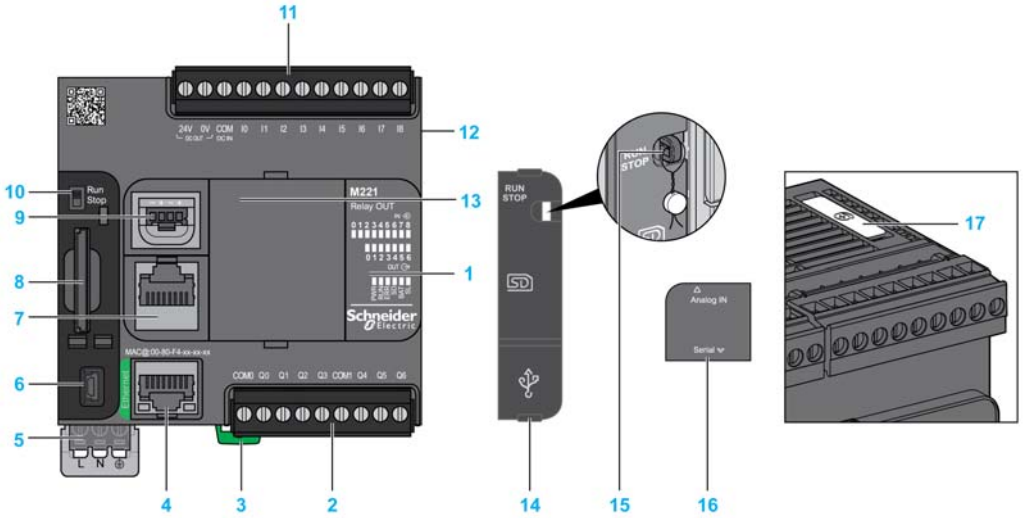

N°	Description	Refer to
1	Status LEDs	–
2	Output removable terminal block	Rules for Removable Screw Terminal Block *(see page 93)*
3	Clip-on lock for 35 mm (1.38 in.) top hat section rail (DIN-rail)	DIN Rail *(see page 83)*
4	Ethernet port / RJ45 connector	Ethernet port *(see page 330)*
5	100...240 Vac power supply	Power supply *(see page 104)*
6	USB mini-B programming port / For terminal connection to a programming PC (SoMachine Basic)	USB mini-B programming port *(see page 328)*
7	Serial line port 1 / RJ45 connector (RS-232 or RS-485)	Serial line 1 *(see page 333)*
8	SD Card slot	SD Card Slot *(see page 62)*
9	2 analog inputs	Analog Inputs *(see page 195)*
10	Run/Stop switch	Run/Stop switch *(see page 60)*
11	Input removable terminal block	Rules for Removable Screw Terminal Block *(see page 93)*
12	I/O expansion connector	–
13	Cartridge slot	–
14	Protective cover (SD Card slot, Run/Stop switch and USB mini-B programming port)	–
15	Locking hook	–
16	Removable analog inputs cover	–
17	Battery holder	Installing and Replacing the Battery *(see page 49)*

Status LEDs

The following figure shows the status LEDs:

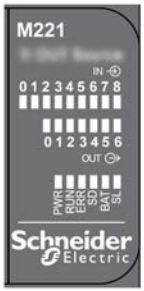

The following table describes the status LEDs:

Label	Function Type	Color	Status	Description		
				Controller States[1]	**Prg Port Communication**	**Application Execution**
PWR	Power	Green	On	Indicates that power is applied.		
			Off	Indicates that power is removed.		
RUN	Machine Status	Green	On	Indicates that the controller is running a valid application.		
			Flashing	Indicates that the controller has a valid application that is stopped.		
			Off	Indicates that the controller is not programmed		
ERR	Error	Red	On*	EXCEPTION	Restricted	NO
			Flashing (with RUN status LED Off)	INTERNAL ERROR	Restricted	NO
			Slow flash	Minor error detected	Yes	Depends on the RUN status LED
			1 single flash	No application	Yes	Yes
SD	SD Card Access (*see page 62*)	Green	On	Indicates that the SD card is being accessed		
			Flashing	Indicates that an error was detected during the SD card operation.		
			Off	Indicates no access (idle) or no card is present.		
BAT	Battery (*see page 48*)	Red	On	Indicates that the battery needs to be replaced.		
			Flashing	Indicates that the battery charge is low.		
			Off	Indicates that the battery is OK.		
SL	Serial line 1 (*see page 333*)	Green	On	Indicates the status of Serial line 1		
			Flashing	Indicates activity on Serial line 1		
			Off	Indicates no serial communication		

* ERR LED is also On during booting process

NOTE: For information about the LEDs integrated into the Ethernet connector, refer to Ethernet Status LEDs (*see page 332*)

[1] For more information about the controller state description, refer to the M221 Logic Controller - Programming Guide.

Dimensions

The following figure shows the external dimensions of the logic controllers:

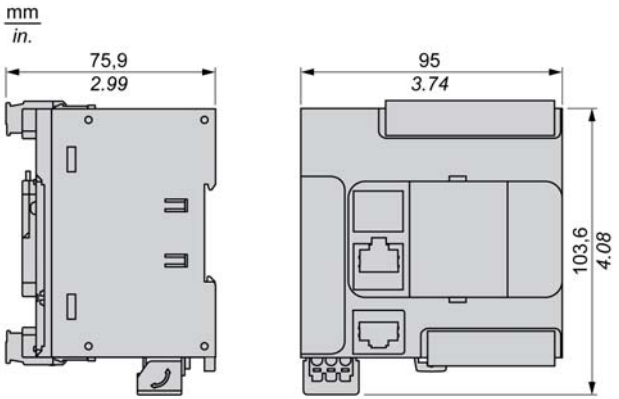

Chapter 6
TM221C16T

TM221C16T Presentation

Overview

The following features are integrated into the TM221C16T logic controller:

- 9 digital inputs
  - 4 fast inputs (HSC)
  - 5 regular inputs
- 7 digital outputs
  - 2 fast transistor outputs
  - 5 regular transistor outputs
- 2 analog inputs
- Communication port
  - 1 serial line port
  - 1 USB mini-B programming port

Description

The following figure shows the different components of the logic controllers:

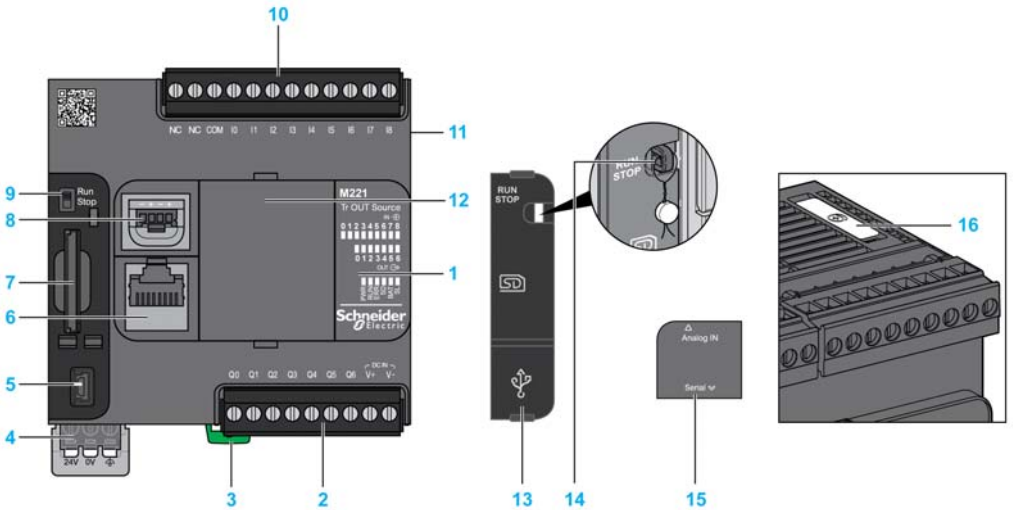

N°	Description	Refer to
1	Status LEDs	–
2	Output removable terminal block	Rules for Removable Screw Terminal Block *(see page 93)*
3	Clip-on lock for 35 mm (1.38 in.) top hat section rail (DIN-rail)	DIN Rail *(see page 83)*
4	24 Vdc power supply	Power supply *(see page 98)*
5	USB mini-B programming port / For terminal connection to a programming PC (SoMachine Basic)	USB mini-B programming port *(see page 328)*
6	Serial line port 1 / RJ45 connector (RS-232 or RS-485)	Serial line 1 *(see page 333)*
7	SD Card slot	SD Card Slot *(see page 62)*
8	2 analog inputs	Analog Inputs *(see page 195)*
9	Run/Stop switch	Run/Stop switch *(see page 60)*
10	Input removable terminal block	Rules for Removable Screw Terminal Block *(see page 93)*
11	I/O expansion connector	–
12	Cartridge slot	–
13	Protective cover (SD Card slot, Run/Stop switch and USB mini-B programming port)	–
14	Locking hook	–
15	Removable analog inputs cover	–
16	Battery holder	Installing and Replacing the Battery *(see page 49)*

Status LEDs

The following figure shows the status LEDs:

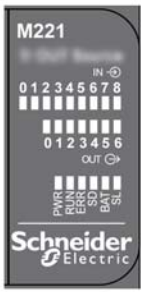

The following table describes the status LEDs:

Label	Function Type	Color	Status	Description		
				Controller States[1]	**Prg Port Communication**	**Application Execution**
PWR	Power	Green	On	Indicates that power is applied.		
			Off	Indicates that power is removed.		
RUN	Machine Status	Green	On	Indicates that the controller is running a valid application.		
			Flashing	Indicates that the controller has a valid application that is stopped.		
			Off	Indicates that the controller is not programmed		
ERR	Error	Red	On*	EXCEPTION	Restricted	NO
			Flashing (with RUN status LED Off)	INTERNAL ERROR	Restricted	NO
			Slow flash	Minor error detected	Yes	Depends on the RUN status LED
			1 single flash	No application	Yes	Yes
SD	SD Card Access (*see page 62*)	Green	On	Indicates that the SD card is being accessed		
			Flashing	Indicates that an error was detected during the SD card operation.		
			Off	Indicates no access (idle) or no card is present.		
BAT	Battery (*see page 48*)	Red	On	Indicates that the battery needs to be replaced.		
			Flashing	Indicates that the battery charge is low.		
			Off	Indicates that the battery is OK.		
SL	Serial line 1 (*see page 333*)	Green	On	Indicates the status of Serial line 1		
			Flashing	Indicates activity on Serial line 1		
			Off	Indicates no serial communication		
* ERR LED is also On during booting process **NOTE:** For information about the LEDs integrated into the Ethernet connector, refer to Ethernet Status LEDs (*see page 332*)						

[1] For more information about the controller state description, refer to the M221 Logic Controller - Programming Guide.

Dimensions

The following figure shows the external dimensions of the logic controllers:

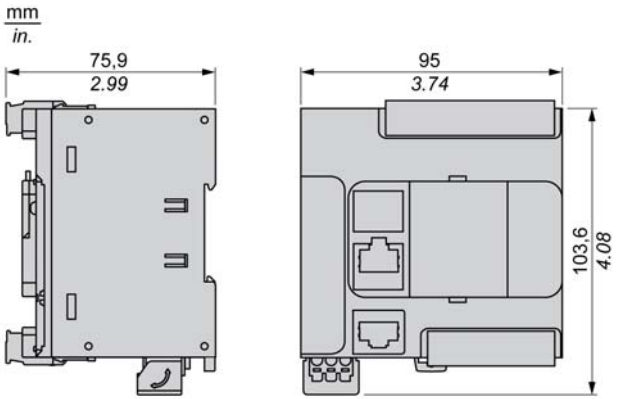

Chapter 7
TM221CE16T

TM221CE16T Presentation

Overview

The following features are integrated into the TM221CE16T logic controller:

- 9 digital inputs
  - 4 fast inputs (HSC)
  - 5 regular inputs
- 7 digital outputs
  - 2 fast transistor outputs
  - 5 regular transistor outputs
- 2 analog inputs
- Communication port
  - 1 serial line port
  - 1 USB mini-B programming port
  - 1 Ethernet port

Description

The following figure shows the different components of the logic controllers:

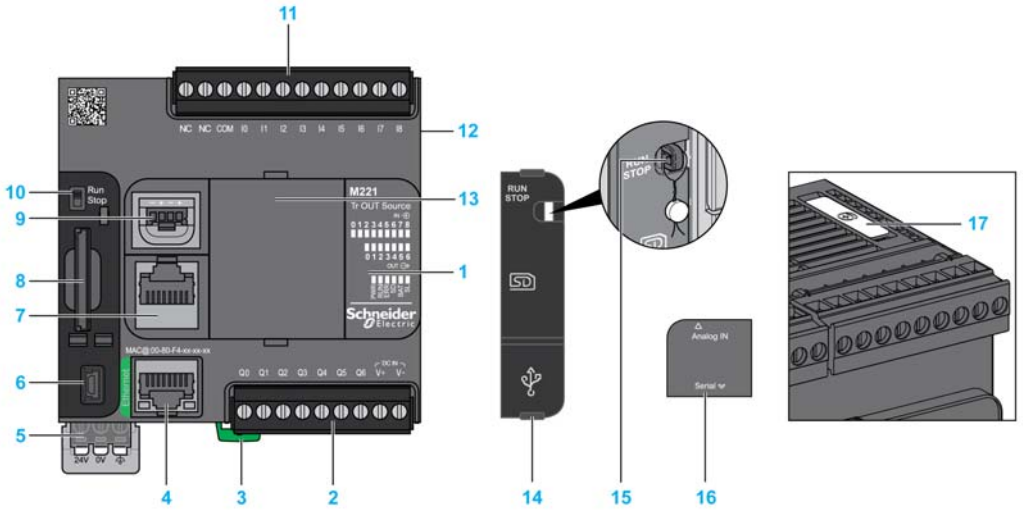

N°	Description	Refer to
1	Status LEDs	–
2	Output removable terminal block	Rules for Removable Screw Terminal Block *(see page 93)*
3	Clip-on lock for 35 mm (1.38 in.) top hat section rail (DIN-rail)	DIN Rail *(see page 83)*
4	Ethernet port / RJ45 connector	Ethernet port *(see page 330)*
5	24 Vdc power supply	Power supply *(see page 98)*
6	USB mini-B programming port / For terminal connection to a programming PC (SoMachine Basic)	USB mini-B programming port *(see page 328)*
7	Serial line port 1 / RJ45 connector (RS-232 or RS-485)	Serial line 1 *(see page 333)*
8	SD Card slot	SD Card Slot *(see page 62)*
9	2 analog inputs	Analog Inputs *(see page 195)*
10	Run/Stop switch	Run/Stop switch *(see page 60)*
11	Input removable terminal block	Rules for Removable Screw Terminal Block *(see page 93)*
12	I/O expansion connector	–
13	Cartridge slot	–
14	Protective cover (SD Card slot, Run/Stop switch and USB mini-B programming port)	–
15	Locking hook	–
16	Removable analog inputs cover	–
17	Battery holder	Installing and Replacing the Battery *(see page 49)*

Status LEDs

The following figure shows the status LEDs:

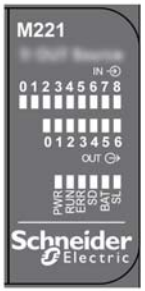

The following table describes the status LEDs:

Label	Function Type	Color	Status	Description		
				Controller States[1]	**Prg Port Communication**	**Application Execution**
PWR	Power	Green	On	Indicates that power is applied.		
			Off	Indicates that power is removed.		
RUN	Machine Status	Green	On	Indicates that the controller is running a valid application.		
			Flashing	Indicates that the controller has a valid application that is stopped.		
			Off	Indicates that the controller is not programmed		
ERR	Error	Red	On*	EXCEPTION	Restricted	NO
			Flashing (with RUN status LED Off)	INTERNAL ERROR	Restricted	NO
			Slow flash	Minor error detected	Yes	Depends on the RUN status LED
			1 single flash	No application	Yes	Yes
SD	SD Card Access *(see page 62)*	Green	On	Indicates that the SD card is being accessed		
			Flashing	Indicates that an error was detected during the SD card operation.		
			Off	Indicates no access (idle) or no card is present.		
BAT	Battery *(see page 48)*	Red	On	Indicates that the battery needs to be replaced.		
			Flashing	Indicates that the battery charge is low.		
			Off	Indicates that the battery is OK.		
SL	Serial line 1 *(see page 333)*	Green	On	Indicates the status of Serial line 1		
			Flashing	Indicates activity on Serial line 1		
			Off	Indicates no serial communication		
* ERR LED is also On during booting process **NOTE:** For information about the LEDs integrated into the Ethernet connector, refer to Ethernet Status LEDs *(see page 332)*						

[1] For more information about the controller state description, refer to the M221 Logic Controller - Programming Guide.

Dimensions

The following figure shows the external dimensions of the logic controllers:

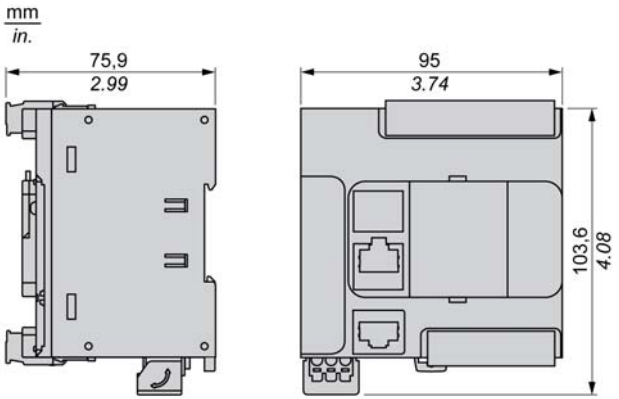

Chapter 8
TM221C24R

TM221C24R Presentation

Overview

The following features are integrated into the TM221C24R logic controller:

- 14 digital inputs
  - 4 fast inputs (HSC)
  - 10 regular inputs
- 10 digital outputs
  - 10 relay outputs
- 2 analog inputs
- Communication port
  - 1 serial line port
  - 1 USB mini-B programming port

Description

The following figure shows the different components of the logic controller:

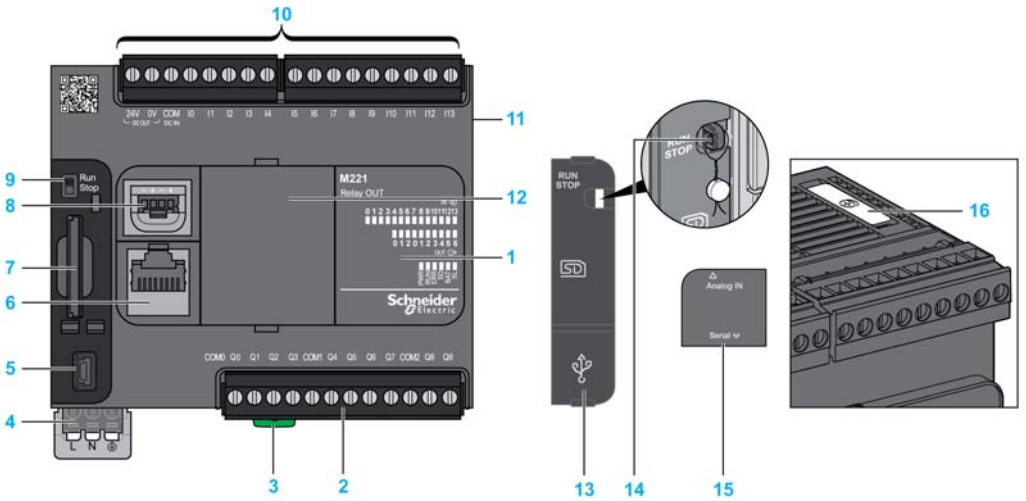

N°	Description	Refer to
1	Status LEDs	–
2	Output removable terminal block	Rules for Removable Screw Terminal Block *(see page 93)*
3	Clip-on lock for 35 mm (1.38 in.) top hat section rail (DIN-rail)	DIN Rail *(see page 83)*
4	100...240 Vac power supply	Power supply *(see page 104)*
5	USB mini-B programming port / For terminal connection to a programming PC (SoMachine Basic)	USB mini-B programming port *(see page 328)*
6	Serial line port 1 / RJ45 connector (RS-232 or RS-485)	Serial line 1 *(see page 333)*
7	SD Card slot	SD Card Slot *(see page 62)*
8	2 analog inputs	Analog Inputs *(see page 195)*
9	Run/Stop switch	Run/Stop switch *(see page 60)*
10	Input removable terminal block	Rules for Removable Screw Terminal Block *(see page 93)*
11	I/O expansion connector	–
12	Cartridge slot	–
13	Protective cover (SD Card slot, Run/Stop switch and USB mini-B programming port)	–
14	Locking hook	–
15	Removable analog inputs cover	–
16	Battery holder	Installing and Replacing the Battery *(see page 49)*

Status LEDs

The following figure shows the status LEDs:

The following table describes the status LEDs:

Label	Function Type	Color	Status	Description		
				Controller States[1]	**Prg Port Communication**	**Application Execution**
PWR	Power	Green	On	Indicates that power is applied.		
			Off	Indicates that power is removed.		
RUN	Machine Status	Green	On	Indicates that the controller is running a valid application.		
			Flashing	Indicates that the controller has a valid application that is stopped.		
			Off	Indicates that the controller is not programmed		
ERR	Error	Red	On*	EXCEPTION	Restricted	NO
			Flashing (with RUN status LED Off)	INTERNAL ERROR	Restricted	NO
			Slow flash	Minor error detected	Yes	Depends on the RUN status LED
			1 single flash	No application	Yes	Yes
SD	SD Card Access *(see page 62)*	Green	On	Indicates that the SD card is being accessed		
			Flashing	Indicates that an error was detected during the SD card operation.		
			Off	Indicates no access (idle) or no card is present.		
BAT	Battery *(see page 48)*	Red	On	Indicates that the battery needs to be replaced.		
			Flashing	Indicates that the battery charge is low.		
			Off	Indicates that the battery is OK.		
SL	Serial line 1 *(see page 333)*	Green	On	Indicates the status of Serial line 1		
			Flashing	Indicates activity on Serial line 1		
			Off	Indicates no serial communication		
* ERR LED is also On during booting process **NOTE:** For information about the LEDs integrated into the Ethernet connector, refer to Ethernet Status LEDs *(see page 332)*						

[1] For more information about the controller state description, refer to the M221 Logic Controller - Programming Guide.

Dimensions

The following figure shows the external dimensions of the logic controllers:

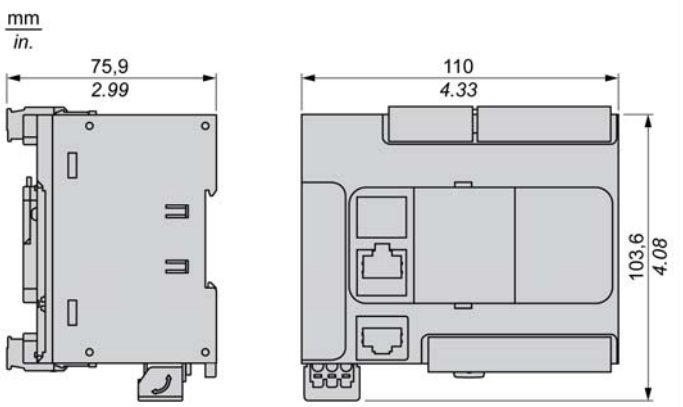

Chapter 9
TM221CE24R

TM221CE24R Presentation

Overview

The following features are integrated into the TM221CE24R logic controller:

- 14 digital inputs
  - 4 fast inputs (HSC)
  - 10 regular inputs
- 10 digital outputs
  - 10 relay outputs
- 2 analog inputs
- Communication port
  - 1 serial line port
  - 1 USB mini-B programming port
  - 1 Ethernet port

Description

The following figure shows the different components of the logic controllers:

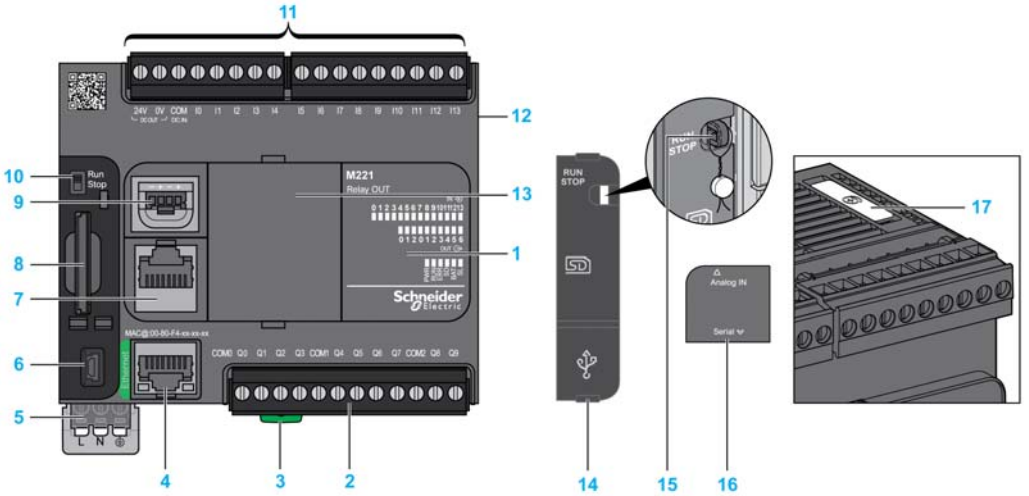

N°	Description	Refer to
1	Status LEDs	–
2	Output removable terminal block	Rules for Removable Screw Terminal Block *(see page 93)*
3	Clip-on lock for 35 mm (1.38 in.) top hat section rail (DIN-rail)	DIN Rail *(see page 83)*
4	Ethernet port / RJ45 connector	Ethernet port *(see page 330)*
5	100...240 Vac power supply	Power supply *(see page 104)*
6	USB mini-B programming port / For terminal connection to a programming PC (SoMachine Basic)	USB mini-B programming port *(see page 328)*
7	Serial line port 1 / RJ45 connector (RS-232 or RS-485)	Serial line 1 *(see page 333)*
8	SD Card slot	SD Card Slot *(see page 62)*
9	2 analog inputs	Analog Inputs *(see page 195)*
10	Run/Stop switch	Run/Stop switch *(see page 60)*
11	Input removable terminal block	Rules for Removable Screw Terminal Block *(see page 93)*
12	I/O expansion connector	–
13	Cartridge slot	–
14	Protective cover (SD Card slot, Run/Stop switch and USB mini-B programming port)	–
15	Locking hook	–
16	Removable analog inputs cover	–
17	Battery holder	Installing and Replacing the Battery *(see page 49)*

Status LEDs

The following figure shows the status LEDs:

The following table describes the status LEDs:

Label	Function Type	Color	Status	Description		
				Controller States[1]	**Prg Port Communication**	**Application Execution**
PWR	Power	Green	On	Indicates that power is applied.		
			Off	Indicates that power is removed.		
RUN	Machine Status	Green	On	Indicates that the controller is running a valid application.		
			Flashing	Indicates that the controller has a valid application that is stopped.		
			Off	Indicates that the controller is not programmed		
ERR	Error	Red	On*	EXCEPTION	Restricted	NO
			Flashing (with RUN status LED Off)	INTERNAL ERROR	Restricted	NO
			Slow flash	Minor error detected	Yes	Depends on the RUN status LED
			1 single flash	No application	Yes	Yes
SD	SD Card Access *(see page 62)*	Green	On	Indicates that the SD card is being accessed		
			Flashing	Indicates that an error was detected during the SD card operation.		
			Off	Indicates no access (idle) or no card is present.		
BAT	Battery *(see page 48)*	Red	On	Indicates that the battery needs to be replaced.		
			Flashing	Indicates that the battery charge is low.		
			Off	Indicates that the battery is OK.		
SL	Serial line 1 *(see page 333)*	Green	On	Indicates the status of Serial line 1		
			Flashing	Indicates activity on Serial line 1		
			Off	Indicates no serial communication		
* ERR LED is also On during booting process **NOTE:** For information about the LEDs integrated into the Ethernet connector, refer to Ethernet Status LEDs *(see page 332)*						

[1] For more information about the controller state description, refer to the M221 Logic Controller - Programming Guide.

Dimensions

The following figure shows the external dimensions of the logic controllers:

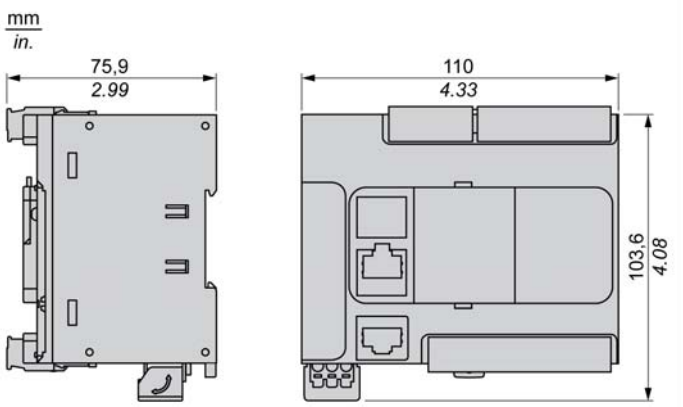

Chapter 10
TM221C24T

TM221C24T Presentation

Overview

The following features are integrated into the TM221C24T logic controller:

- 14 digital inputs
  - 4 fast inputs (HSC)
  - 10 regular inputs
- 10 digital outputs
  - 2 fast transistor outputs
  - 8 regular transistor outputs
- 2 analog inputs
- Communication port
  - 1 serial line port
  - 1 USB mini-B programming port

Description

The following figure shows the different components of the logic controllers:

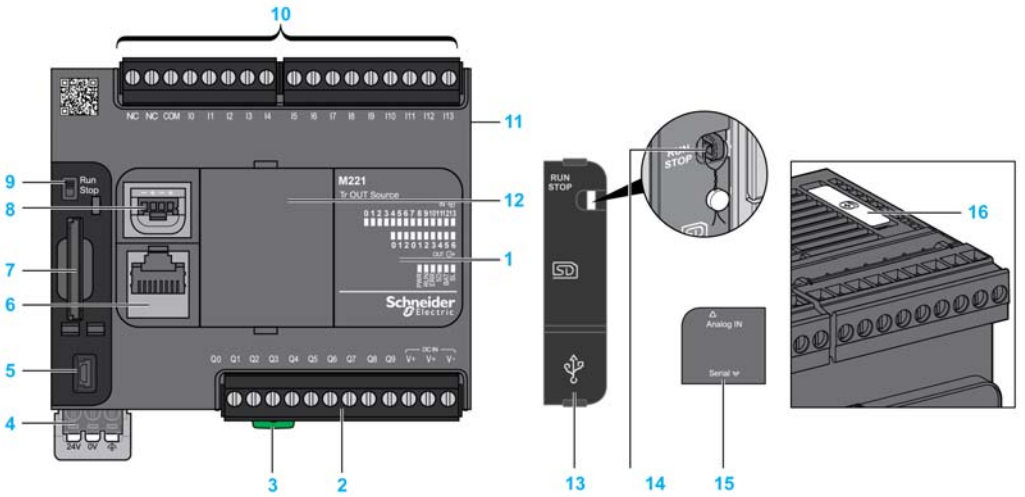

N°	Description	Refer to
1	Status LEDs	–
2	Output removable terminal block	Rules for Removable Screw Terminal Block *(see page 93)*
3	Clip-on lock for 35 mm (1.38 in.) top hat section rail (DIN-rail)	DIN Rail *(see page 83)*
4	24 Vdc power supply	Power supply *(see page 98)*
5	USB mini-B programming port / For terminal connection to a programming PC (SoMachine Basic)	USB mini-B programming port *(see page 328)*
6	Serial line port 1 / RJ45 connector (RS-232 or RS-485)	Serial line 1 *(see page 333)*
7	SD Card slot	SD Card Slot *(see page 62)*
8	2 analog inputs	Analog Inputs *(see page 195)*
9	Run/Stop switch	Run/Stop switch *(see page 60)*
10	Input removable terminal block	Rules for Removable Screw Terminal Block *(see page 93)*
11	I/O expansion connector	–
12	Cartridge slot	–
13	Protective cover (SD Card slot, Run/Stop switch and USB mini-B programming port)	–
14	Locking hook	–
15	Removable analog inputs cover	–
16	Battery holder	Installing and Replacing the Battery *(see page 49)*

Status LEDs

The following figure shows the status LEDs:

The following table describes the status LEDs:

Label	Function Type	Color	Status	Description		
				Controller States[1]	**Prg Port Communication**	**Application Execution**
PWR	Power	Green	On	Indicates that power is applied.		
			Off	Indicates that power is removed.		
RUN	Machine Status	Green	On	Indicates that the controller is running a valid application.		
			Flashing	Indicates that the controller has a valid application that is stopped.		
			Off	Indicates that the controller is not programmed		
ERR	Error	Red	On*	EXCEPTION	Restricted	NO
			Flashing (with RUN status LED Off)	INTERNAL ERROR	Restricted	NO
			Slow flash	Minor error detected	Yes	Depends on the RUN status LED
			1 single flash	No application	Yes	Yes
SD	SD Card Access *(see page 62)*	Green	On	Indicates that the SD card is being accessed		
			Flashing	Indicates that an error was detected during the SD card operation.		
			Off	Indicates no access (idle) or no card is present.		
BAT	Battery *(see page 48)*	Red	On	Indicates that the battery needs to be replaced.		
			Flashing	Indicates that the battery charge is low.		
			Off	Indicates that the battery is OK.		
SL	Serial line 1 *(see page 333)*	Green	On	Indicates the status of Serial line 1		
			Flashing	Indicates activity on Serial line 1		
			Off	Indicates no serial communication		

* ERR LED is also On during booting process

NOTE: For information about the LEDs integrated into the Ethernet connector, refer to Ethernet Status LEDs *(see page 332)*

[1] For more information about the controller state description, refer to the M221 Logic Controller - Programming Guide.

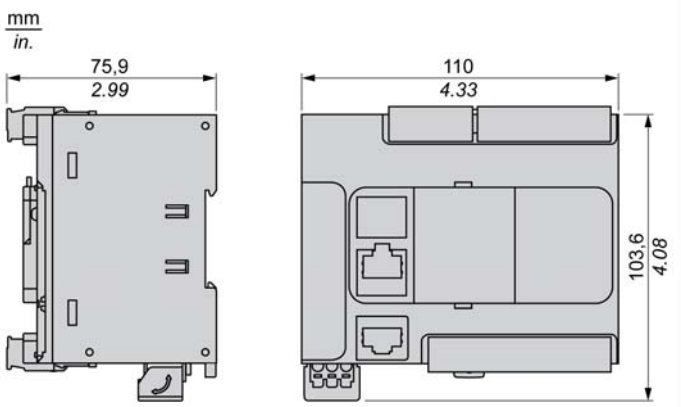
mm
in.
75,9
2.99
110
4.33
103,6
4.08

Chapter 11
TM221CE24T

TM221CE24T Presentation

Overview

The following features are integrated into the TM221CE24T logic controller:

- 14 digital inputs
  - 4 fast inputs (HSC)
  - 10 regular inputs
- 10 digital outputs
  - 2 fast transistor outputs
  - 8 regular transistor outputs
- 2 analog inputs
- Communication port
  - 1 serial line port
  - 1 USB mini-B programming port
  - 1 Ethernet port

Description

The following figure shows the different components of the logic controllers:

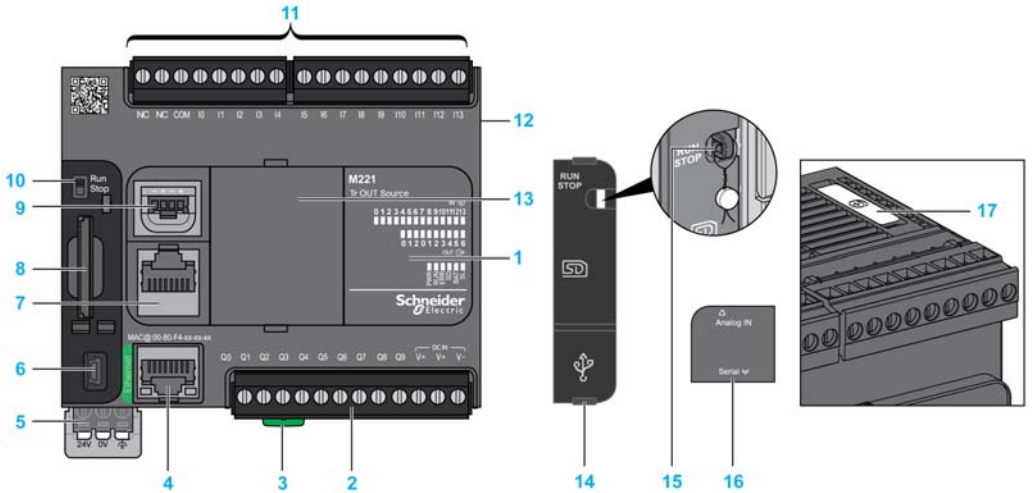

N°	Description	Refer to
1	Status LEDs	–
2	Output removable terminal block	Rules for Removable Screw Terminal Block *(see page 93)*
3	Clip-on lock for 35 mm (1.38 in.) top hat section rail (DIN-rail)	DIN Rail *(see page 83)*
4	Ethernet port / RJ45 connector	Ethernet port *(see page 330)*
5	24 Vdc power supply	Power supply *(see page 98)*
6	USB mini-B programming port / For terminal connection to a programming PC (SoMachine Basic)	USB mini-B programming port *(see page 328)*
7	Serial line port 1 / RJ45 connector (RS-232 or RS-485)	Serial line 1 *(see page 333)*
8	SD Card slot	SD Card Slot *(see page 62)*
9	2 analog inputs	Analog Inputs *(see page 195)*
10	Run/Stop switch	Run/Stop switch *(see page 60)*
11	Input removable terminal block	Rules for Removable Screw Terminal Block *(see page 93)*
12	I/O expansion connector	–
13	Cartridge slot	–
14	Protective cover (SD Card slot, Run/Stop switch and USB mini-B programming port)	–
15	Locking hook	–
16	Removable analog inputs cover	–
17	Battery holder	Installing and Replacing the Battery *(see page 49)*

Status LEDs

The following figure shows the status LEDs:

The following table describes the status LEDs:

Label	Function Type	Color	Status	Description		
				Controller States[1]	**Prg Port Communication**	**Application Execution**
PWR	Power	Green	On	Indicates that power is applied.		
			Off	Indicates that power is removed.		
RUN	Machine Status	Green	On	Indicates that the controller is running a valid application.		
			Flashing	Indicates that the controller has a valid application that is stopped.		
			Off	Indicates that the controller is not programmed		
ERR	Error	Red	On*	EXCEPTION	Restricted	NO
			Flashing (with RUN status LED Off)	INTERNAL ERROR	Restricted	NO
			Slow flash	Minor error detected	Yes	Depends on the RUN status LED
			1 single flash	No application	Yes	Yes
SD	SD Card Access *(see page 62)*	Green	On	Indicates that the SD card is being accessed		
			Flashing	Indicates that an error was detected during the SD card operation.		
			Off	Indicates no access (idle) or no card is present.		
BAT	Battery *(see page 48)*	Red	On	Indicates that the battery needs to be replaced.		
			Flashing	Indicates that the battery charge is low.		
			Off	Indicates that the battery is OK.		
SL	Serial line 1 *(see page 333)*	Green	On	Indicates the status of Serial line 1		
			Flashing	Indicates activity on Serial line 1		
			Off	Indicates no serial communication		
* ERR LED is also On during booting process **NOTE:** For information about the LEDs integrated into the Ethernet connector, refer to Ethernet Status LEDs *(see page 332)*						

[1] For more information about the controller state description, refer to the M221 Logic Controller - Programming Guide.

Dimensions

The following figure shows the external dimensions of the logic controllers:

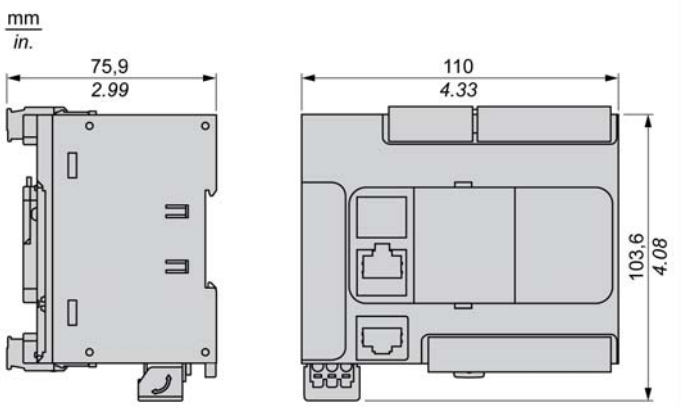

Chapter 12
TM221C40R

TM221C40R Presentation

Overview

The following features are integrated into theTM221C40R logic controllers:

- 24 digital inputs
  - 4 fast inputs (HSC)
  - 20 regular inputs
- 16 digital outputs
  - 16 relay outputs
- 2 analog inputs
- Communication port
  - 1 serial line port
  - 1 USB mini-B programming port

Description

The following figure shows the different components of the logic controllers:

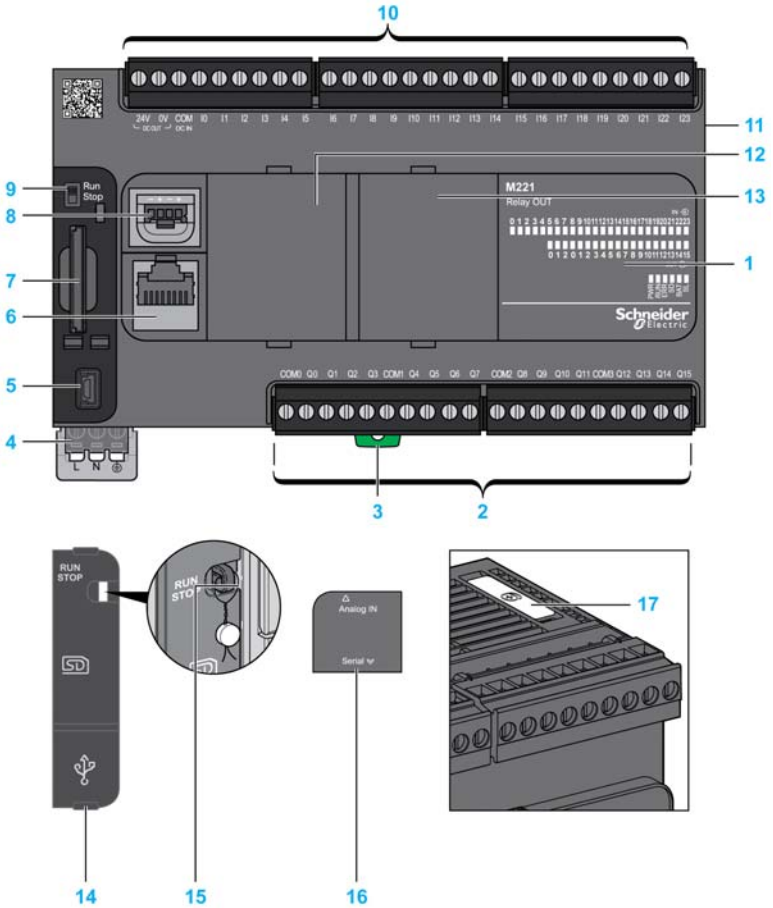

N°	Description	Refer to
1	Status LEDs	–
2	Output removable terminal block	Rules for Removable Screw Terminal Block *(see page 93)*
3	Clip-on lock for 35 mm (1.38 in.) top hat section rail (DIN-rail)	DIN Rail *(see page 83)*
4	100...240 Vac power supply	Power supply *(see page 104)*

N°	Description	Refer to
5	USB mini-B programming port / For terminal connection to a programming PC (SoMachine Basic)	USB mini-B programming port *(see page 328)*
6	Serial line port 1 / RJ45 connector (RS-232 or RS-485)	Serial line 1 *(see page 333)*
7	SD Card slot	SD Card Slot *(see page 62)*
8	2 analog inputs	Analog Inputs *(see page 195)*
9	Run/Stop switch	Run/Stop switch *(see page 60)*
10	Input removable terminal block	Rules for Removable Screw Terminal Block *(see page 93)*
11	I/O expansion connector	–
12	Cartridge slot 1	–
13	Cartridge slot 2	–
14	Protective cover (SD Card slot, Run/Stop switch and USB mini-B programming port)	–
15	Locking hook	–
16	Removable analog inputs cover	–
17	Battery holder	Installing and Replacing the Battery *(see page 49)*

Status LEDs

The following figure shows the status LEDs:

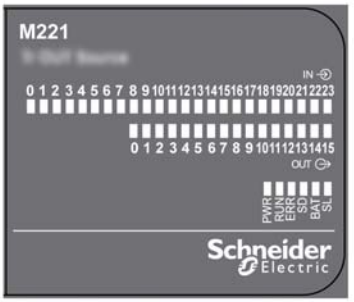

The following table describes the status LEDs:

Label	Function Type	Color	Status	Description		
				Controller States[1]	**Prg Port Communication**	**Application Execution**
PWR	Power	Green	On	Indicates that power is applied.		
			Off	Indicates that power is removed.		
RUN	Machine Status	Green	On	Indicates that the controller is running a valid application.		
			Flashing	Indicates that the controller has a valid application that is stopped.		
			Off	Indicates that the controller is not programmed		
ERR	Error	Red	On*	EXCEPTION	Restricted	NO
			Flashing (with RUN status LED Off)	INTERNAL ERROR	Restricted	NO
			Slow flash	Minor error detected	Yes	Depends on the RUN status LED
			1 single flash	No application	Yes	Yes
SD	SD Card Access *(see page 62)*	Green	On	Indicates that the SD card is being accessed		
			Flashing	Indicates that an error was detected during the SD card operation.		
			Off	Indicates no access (idle) or no card is present.		
BAT	Battery *(see page 48)*	Red	On	Indicates that the battery needs to be replaced.		
			Flashing	Indicates that the battery charge is low.		
			Off	Indicates that the battery is OK.		
SL	Serial line 1 *(see page 333)*	Green	On	Indicates the status of Serial line 1		
			Flashing	Indicates activity on Serial line 1		
			Off	Indicates no serial communication		
* ERR LED is also On during booting process **NOTE:** For information about the LEDs integrated into the Ethernet connector, refer to Ethernet Status LEDs *(see page 332)*						

[1] For more information about the controller state description, refer to the M221 Logic Controller - Programming Guide.

Dimensions

The following figure shows the external dimensions of the logic controllers:

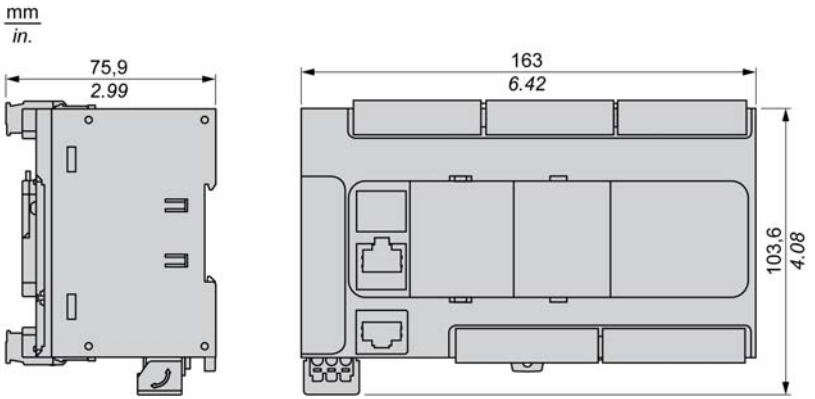

Chapter 13
TM221CE40R

TM221CE40R Presentation

Overview

The following features are integrated into the TM221CE40R logic controllers:

- 24 digital inputs
  - 4 fast inputs (HSC)
  - 20 regular inputs
- 16 digital outputs
  - 16 relay outputs
- 2 analog inputs
- Communication port
  - 1 serial line port
  - 1 USB mini-B programming port
  - 1 Ethernet port

Description

The following figure shows the different components of the logic controllers:

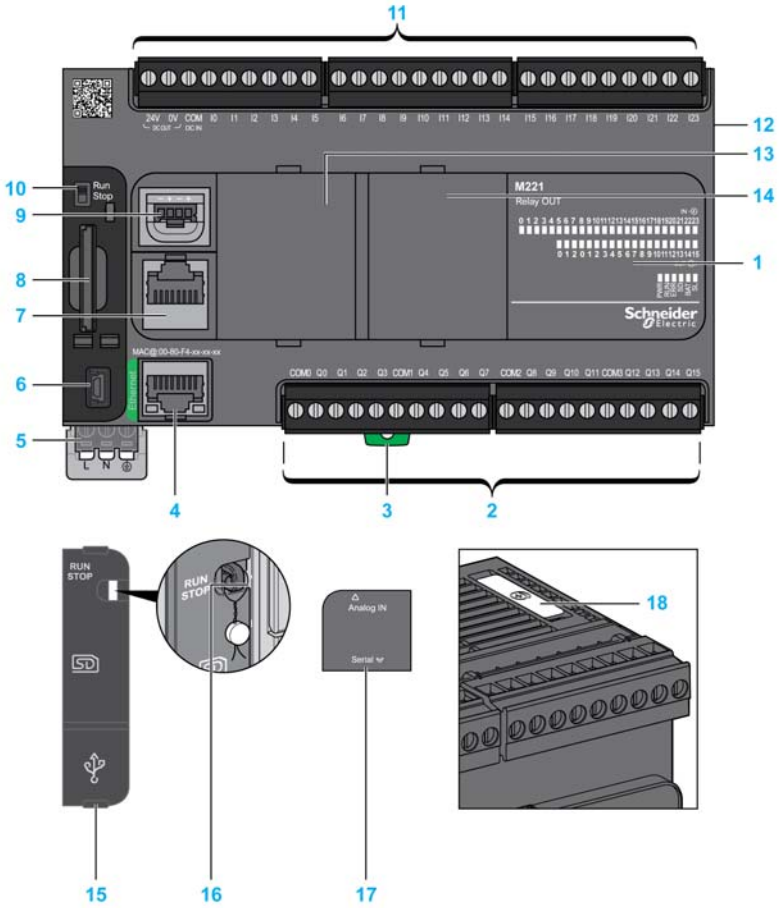

N°	Description	Refer to
1	Status LEDs	–
2	Output removable terminal block	Rules for Removable Screw Terminal Block *(see page 93)*
3	Clip-on lock for 35 mm (1.38 in.) top hat section rail (DIN-rail)	DIN Rail *(see page 83)*
4	Ethernet port / RJ45 connector	Ethernet port *(see page 330)*
5	100...240 Vac power supply	Power supply *(see page 104)*

N°	Description	Refer to
6	USB mini-B programming port / For terminal connection to a programming PC (SoMachine Basic)	USB mini-B programming port *(see page 328)*
7	Serial line port 1 / RJ45 connector (RS-232 or RS-485)	Serial line 1 *(see page 333)*
8	SD Card slot	SD Card Slot *(see page 62)*
9	2 analog inputs	Analog Inputs *(see page 195)*
10	Run/Stop switch	Run/Stop switch *(see page 60)*
11	Input removable terminal block	Rules for Removable Screw Terminal Block *(see page 93)*
12	I/O expansion connector	–
13	Cartridge slot 1	–
14	Cartridge slot 2	–
15	Protective cover (SD Card slot, Run/Stop switch and USB mini-B programming port)	–
16	Locking hook	–
17	Removable analog inputs cover	–
18	Battery holder	Installing and Replacing the Battery *(see page 49)*

Status LEDs

The following figure shows the status LEDs:

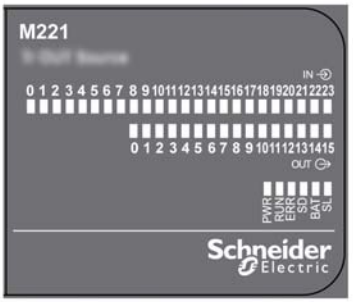

The following table describes the status LEDs:

Label	Function Type	Color	Status	Description		
				Controller States[1]	**Prg Port Communication**	**Application Execution**
PWR	Power	Green	On	Indicates that power is applied.		
			Off	Indicates that power is removed.		
RUN	Machine Status	Green	On	Indicates that the controller is running a valid application.		
			Flashing	Indicates that the controller has a valid application that is stopped.		
			Off	Indicates that the controller is not programmed		
ERR	Error	Red	On*	EXCEPTION	Restricted	NO
			Flashing (with RUN status LED Off)	INTERNAL ERROR	Restricted	NO
			Slow flash	Minor error detected	Yes	Depends on the RUN status LED
			1 single flash	No application	Yes	Yes
SD	SD Card Access *(see page 62)*	Green	On	Indicates that the SD card is being accessed		
			Flashing	Indicates that an error was detected during the SD card operation.		
			Off	Indicates no access (idle) or no card is present.		
BAT	Battery *(see page 48)*	Red	On	Indicates that the battery needs to be replaced.		
			Flashing	Indicates that the battery charge is low.		
			Off	Indicates that the battery is OK.		
SL	Serial line 1 *(see page 333)*	Green	On	Indicates the status of Serial line 1		
			Flashing	Indicates activity on Serial line 1		
			Off	Indicates no serial communication		
* ERR LED is also On during booting process **NOTE:** For information about the LEDs integrated into the Ethernet connector, refer to Ethernet Status LEDs *(see page 332)*						

[1] For more information about the controller state description, refer to the M221 Logic Controller - Programming Guide.

Dimensions

The following figure shows the external dimensions of the logic controllers:

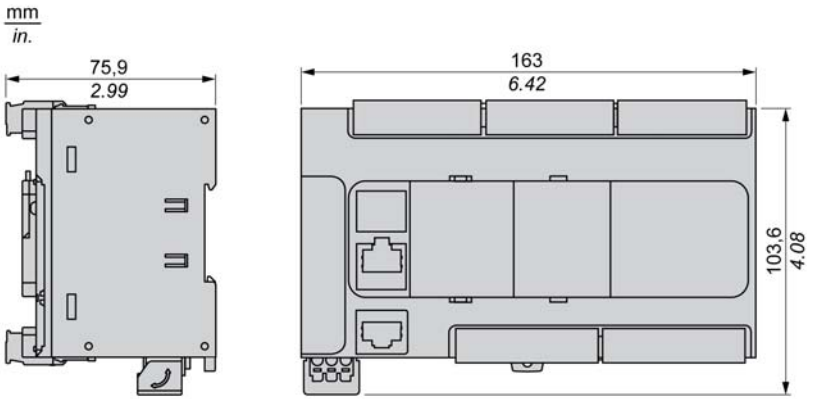

Chapter 14
TM221C40T

TM221C40T Presentation

Overview

The following features are integrated into the TM221C40T logic controller:

- 24 digital inputs
  - 4 fast inputs (HSC)
  - 20 regular inputs
- 16 digital outputs
  - 2 fast transistor outputs
  - 14 regular transistor outputs
- 2 analog inputs
- Communication port
  - 1 serial line port
  - 1 USB mini-B programming port

Description

The following figure shows the different components of the logic controllers:

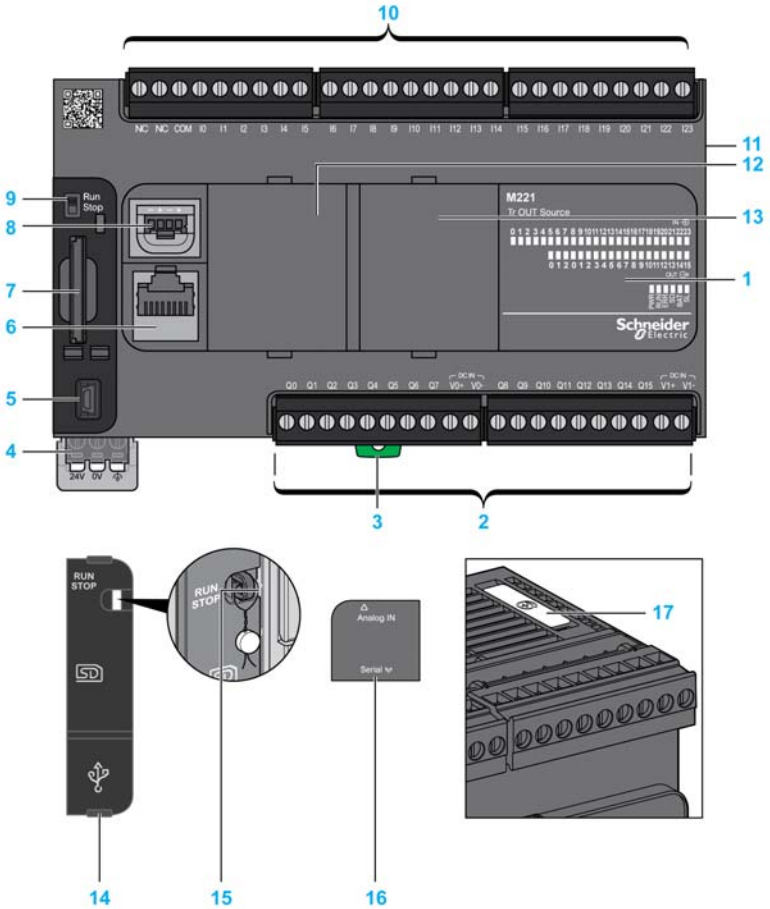

N°	Description	Refer to
1	Status LEDs	–
2	Output removable terminal block	Rules for Removable Screw Terminal Block *(see page 93)*
3	Clip-on lock for 35 mm (1.38 in.) top hat section rail (DIN-rail)	DIN Rail *(see page 83)*
4	24 Vdc power supply	Power supply *(see page 98)*

N°	Description	Refer to
5	USB mini-B programming port / For terminal connection to a programming PC (SoMachine Basic)	USB mini-B programming port *(see page 328)*
6	Serial line port 1 / RJ45 connector (RS-232 or RS-485)	Serial line 1 *(see page 333)*
7	SD Card slot	SD Card Slot *(see page 62)*
8	2 analog inputs	Analog Inputs *(see page 195)*
9	Run/Stop switch	Run/Stop switch *(see page 60)*
10	Input removable terminal block	Rules for Removable Screw Terminal Block *(see page 93)*
11	I/O expansion connector	–
12	Cartridge slot 1	–
13	Cartridge slot 2	–
14	Protective cover (SD Card slot, Run/Stop switch and USB mini-B programming port)	–
15	Locking hook	–
16	Removable analog inputs cover	–
17	Battery holder	Installing and Replacing the Battery *(see page 49)*

Status LEDs

The following figure shows the status LEDs:

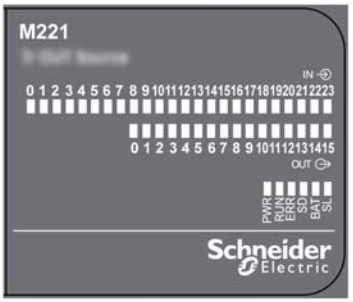

The following table describes the status LEDs:

Label	Function Type	Color	Status	Description		
				Controller States[1]	**Prg Port Communication**	**Application Execution**
PWR	Power	Green	On	Indicates that power is applied.		
			Off	Indicates that power is removed.		
RUN	Machine Status	Green	On	Indicates that the controller is running a valid application.		
			Flashing	Indicates that the controller has a valid application that is stopped.		
			Off	Indicates that the controller is not programmed		
ERR	Error	Red	On*	EXCEPTION	Restricted	NO
			Flashing (with RUN status LED Off)	INTERNAL ERROR	Restricted	NO
			Slow flash	Minor error detected	Yes	Depends on the RUN status LED
			1 single flash	No application	Yes	Yes
SD	SD Card Access *(see page 62)*	Green	On	Indicates that the SD card is being accessed		
			Flashing	Indicates that an error was detected during the SD card operation.		
			Off	Indicates no access (idle) or no card is present.		
BAT	Battery *(see page 48)*	Red	On	Indicates that the battery needs to be replaced.		
			Flashing	Indicates that the battery charge is low.		
			Off	Indicates that the battery is OK.		
SL	Serial line 1 *(see page 333)*	Green	On	Indicates the status of Serial line 1		
			Flashing	Indicates activity on Serial line 1		
			Off	Indicates no serial communication		
* ERR LED is also On during booting process **NOTE:** For information about the LEDs integrated into the Ethernet connector, refer to Ethernet Status LEDs *(see page 332)*						

[1] For more information about the controller state description, refer to the M221 Logic Controller - Programming Guide.

[redacted]

Chapter 15
TM221CE40T

TM221CE40T Presentation

Overview

The following features are integrated into the TM221CE40T logic controllers:

- 24 digital inputs
  - 4 fast inputs (HSC)
  - 20 regular inputs
- 16 digital outputs
  - 2 fast transistor outputs
  - 14 regular transistor outputs
- 2 analog inputs
- Communication port
  - 1 serial line port
  - 1 USB mini-B programming port
  - 1 Ethernet port

Description

The following figure shows the different components of the logic controllers:

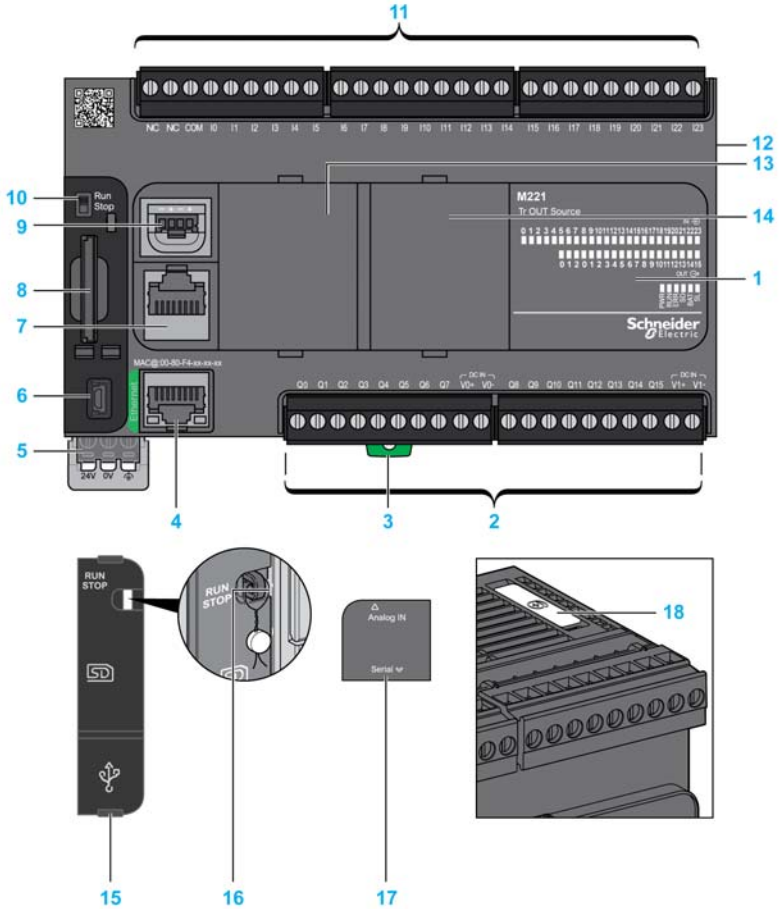

N°	Description	Refer to
1	Status LEDs	–
2	Output removable terminal block	Rules for Removable Screw Terminal Block *(see page 93)*
3	Clip-on lock for 35 mm (1.38 in.) top hat section rail (DIN-rail)	DIN Rail *(see page 83)*
4	Ethernet port / RJ45 connector	Ethernet port *(see page 330)*
5	24 Vdc power supply	Power supply *(see page 98)*

N°	Description	Refer to
6	USB mini-B programming port / For terminal connection to a programming PC (SoMachine Basic)	USB mini-B programming port *(see page 328)*
7	Serial line port 1 / RJ45 connector (RS-232 or RS-485)	Serial line 1 *(see page 333)*
8	SD Card slot	SD Card Slot *(see page 62)*
9	2 analog inputs	Analog Inputs *(see page 195)*
10	Run/Stop switch	Run/Stop switch *(see page 60)*
11	Input removable terminal block	Rules for Removable Screw Terminal Block *(see page 93)*
12	I/O expansion connector	–
13	Cartridge slot 1	–
14	Cartridge slot 2	–
15	Protective cover (SD Card slot, Run/Stop switch and USB mini-B programming port)	–
16	Locking hook	–
17	Removable analog inputs cover	–
18	Battery holder	Installing and Replacing the Battery *(see page 49)*

Status LEDs

The following figure shows the status LEDs:

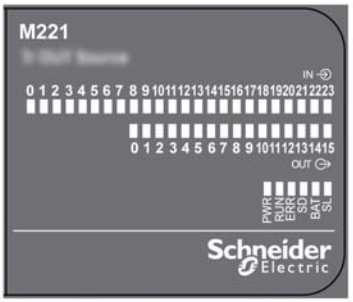

The following table describes the status LEDs:

Label	Function Type	Color	Status	Description		
				Controller States[1]	**Prg Port Communication**	**Application Execution**
PWR	Power	Green	On	Indicates that power is applied.		
			Off	Indicates that power is removed.		
RUN	Machine Status	Green	On	Indicates that the controller is running a valid application.		
			Flashing	Indicates that the controller has a valid application that is stopped.		
			Off	Indicates that the controller is not programmed		
ERR	Error	Red	On*	EXCEPTION	Restricted	NO
			Flashing (with RUN status LED Off)	INTERNAL ERROR	Restricted	NO
			Slow flash	Minor error detected	Yes	Depends on the RUN status LED
			1 single flash	No application	Yes	Yes
SD	SD Card Access *(see page 62)*	Green	On	Indicates that the SD card is being accessed		
			Flashing	Indicates that an error was detected during the SD card operation.		
			Off	Indicates no access (idle) or no card is present.		
BAT	Battery *(see page 48)*	Red	On	Indicates that the battery needs to be replaced.		
			Flashing	Indicates that the battery charge is low.		
			Off	Indicates that the battery is OK.		
SL	Serial line 1 *(see page 333)*	Green	On	Indicates the status of Serial line 1		
			Flashing	Indicates activity on Serial line 1		
			Off	Indicates no serial communication		
* ERR LED is also On during booting process **NOTE:** For information about the LEDs integrated into the Ethernet connector, refer to Ethernet Status LEDs *(see page 332)*						

[1] For more information about the controller state description, refer to the M221 Logic Controller - Programming Guide.

Dimensions

The following figure shows the external dimensions of the logic controllers:

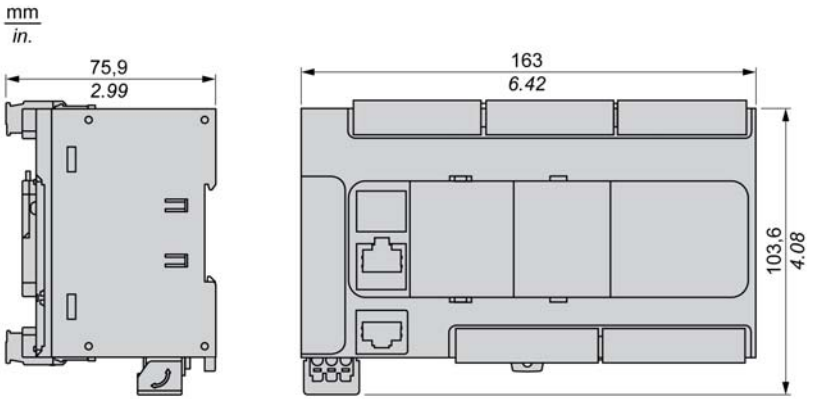

Chapter 16
Embedded I/O Channels

Overview

This chapter describes the embedded I/O channels.

What Is in This Chapter?

This chapter contains the following topics:

Topic	Page
Digital Inputs	168
Relay Outputs	181
Regular and Fast Transistor Outputs	187
Analog Inputs	195

Digital Inputs

Overview

The Modicon TM221C Logic Controller has digital inputs embedded:

Reference	Total number of digital inputs	Fast inputs which can be used as 100 kHz HSC inputs	Regular inputs
TM221C16• TM221CE16•	9	4	5
TM221C24• TM221CE24•	14	4	10
TM221C40• TM221CE40•	24	4	20

For more information, refer to Input Management *(see page 55)*.

⚠ DANGER

FIRE HAZARD

- Use only the recommended wire sizes for the current capacity of the I/O channels and power supplies.
- For relay output (2 A) wiring, use conductors of at least 0.5 mm2 (AWG 20) with a temperature rating of at least 80 °C (176 °F).
- For common conductors of relay output wiring (7 A), or relay output wiring greater than 2 A, use conductors of at least 1.0 mm2 (AWG 16) with a temperature rating of at least 80 °C (176 °F).

Failure to follow these instructions will result in death or serious injury.

⚠ WARNING

UNINTENDED EQUIPMENT OPERATION

Do not exceed any of the rated values specified in the environmental and electrical characteristics tables.

Failure to follow these instructions can result in death, serious injury, or equipment damage.

Input Management Functions Availability

Embedded digital inputs can be configured as functions (Run/Stop, events, HSC, PWM, PLS).

Inputs not configured as functions are used as regular inputs.

The following table shows the possible usage of the TM221C Logic Controller digital inputs:

Reference			Function		Input Function				HSC/PWM/PLS
					None	Run/Stop	Latch	Event	
TM221C40• / TM221CE40•	TM221C24• / TM221CE24•	TM221C16• / TM221CE16•	Fast Input[1]	I0	X	X	–	–	HSC
				I1	X	X	–	–	HSC
			Regular Input	I2	X	X	X	X	–
				I3	X	X	X	X	–
				I4	X	X	X	X	–
				I5	X	X	X	X	–
			Fast Input[1]	I6	X	X	–	–	HSC
				I7	X	X	–	–	HSC
			Regular Input	I8	X	X	–	–	–
		–		I9	X	X	–	–	–
		–		I10	X	X	–	–	–
		–		I11	X	X	–	–	–
		–		I12	X	X	–	–	–
		–		I13	X	X	–	–	–
	–	–		I14	X	X	–	–	–
	–	–		I15	X	X	–	–	–
	–	–		I16	X	X	–	–	–
	–	–		I17	X	X	–	–	–
	–	–		I18	X	X	–	–	–
	–	–		I19	X	X	–	–	–
	–	–		I20	X	X	–	–	–
	–	–		I21	X	X	–	–	–
	–	–		I22	X	X	–	–	–
	–	–		I23	X	X	–	–	–
			X Yes **–** No **1** Can also be used as a regular input						

You can use filters and functions to manage the controller inputs *(see page 55)*.

Regular Input Characteristics

The following table describes the characteristics of the TM221C Logic Controller regular inputs:

Characteristic		Value		
		TM221C16• TM221CE16•	**TM221C24• TM221CE24•**	**TM221C40• TM221CE40•**
Number of regular inputs		5 inputs (I2, I3, I4, I5, I8)	10 inputs (I2...I5, I8...I13)	24 inputs (I2...I5, I8...I23)
Number of channel groups		1 common line for I0...I8	1 common line for I0...I13	1 common line for I0....I23
Input type		Type 1 (IEC/EN 61131-2)		
Logic type		Sink/Source		
Input voltage range		24 Vdc		
Rated input voltage		19.2...28.8 Vdc		
Rated input current		7 mA		
Input impedance		3.4 kΩ		
Input limit values	Voltage at state 1	> 15 Vdc (15...28.8 Vdc)		
	Voltage at state 0	< 5 Vdc (0...5 Vdc)		
	Current at state 1	> 2.5 mA		
	Current at state 0	< 1.0 mA		
Derating		See derating curves *(see page 172)*		
Turn on time	I2, I3, I4, I5	35 µs + filter value[1]		
	I8...I15	100 µs + filter value[1]		
Turn off time	I2, I3, I4, I5	35 µs + filter value[1]		
	I8...I15	100 µs + filter value[1]		
Isolation	Between input and internal logic	500 Vac		
Connection type		Removable screw terminal blocks		
Connector insertion/removal durability		Over 100 times		
Cable	Type	Unshielded		
	Length	Maximum 30 m (98 ft)		
[1] For more information, refer to Integrator Filter Principle *(see page 55)*				

Fast Input Characteristics

The following table describes the characteristics of the TM221C Logic Controller fast inputs:

Characteristic		Value
Number of fast inputs		4 inputs (I0, I1, I6, I7)
Number of channel groups		1 common line
Input type		Type 1 (IEC/EN 61131-2)
Logic type		Sink/Source
Rated input voltage		24 Vdc
Input voltage range		19.2...28.8 Vdc
Rated input current		5 mA
Input impedance		4.9 kΩ
Input limit values	Voltage at state 1	> 15 Vdc (15...28.8 Vdc)
	Voltage at state 0	< 5 Vdc (0...5 Vdc)
	Current at state 1	> 2.6 mA
	Current at state 0	< 0.6 mA
Derating		See derating curves *(see page 172)*
Turn on time		5 µs + filter value[1]
Turn off time		5 µs + filter value[1]
HSC maximum frequency	A/B phase	50 kHz (20 µs)
	Pulse/Direction	100 kHz
	Single phase	100 kHz
HSC supported operation mode		• Up/Down counter • Bi-phase counter • Single counter • Frequency meter
Isolation	Between input and internal logic	500 Vac
	Between channel groups	500 Vac
Connection type		Removable screw terminal block
Connector insertion/removal durability		Over 100 times
Cable	Type	Shielded, including the 24 Vdc power supply
	Length	Maximum 10 m (32.8 ft)
[1] For more information, refer to Integrator Filter Principle *(see page 55)*		

Derating Curves (No Cartridge)

The following figures show the derating curves of the embedded digital inputs for a configuration without cartridge:

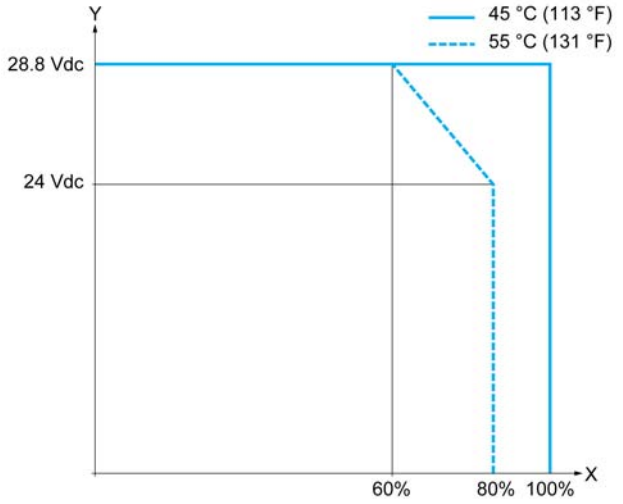

X Input simultaneous ON ratio
Y Input voltage

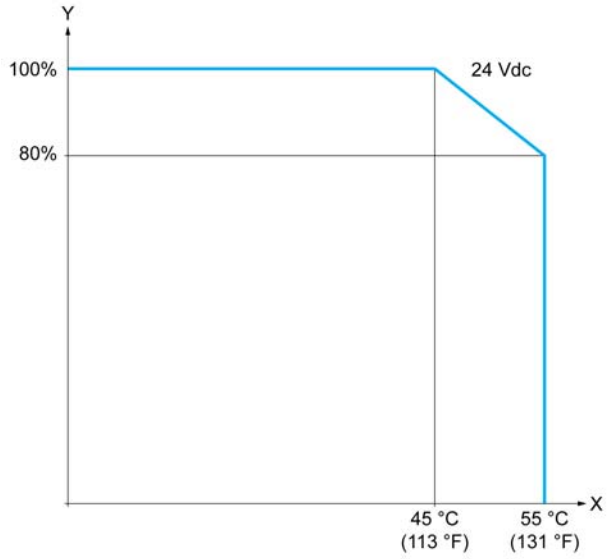

X Ambient temperature
Y Input simultaneous ON ratio

Derating Curves (with Cartridge)

The following figures show the derating curves of the embedded digital inputs for a configuration with cartridge:

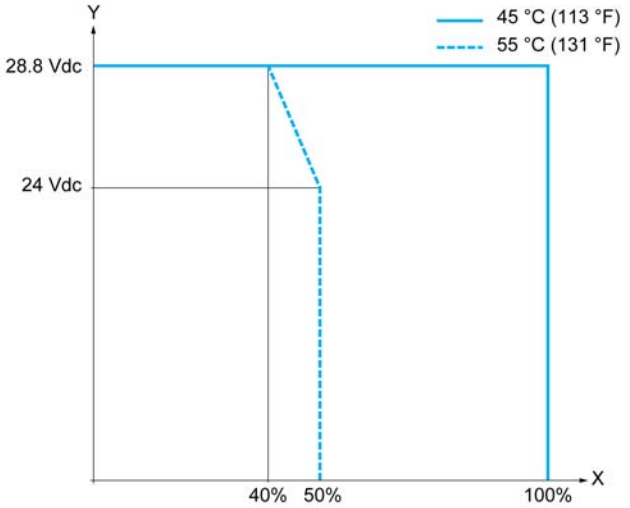

X Input simultaneous ON ratio
Y Input voltage

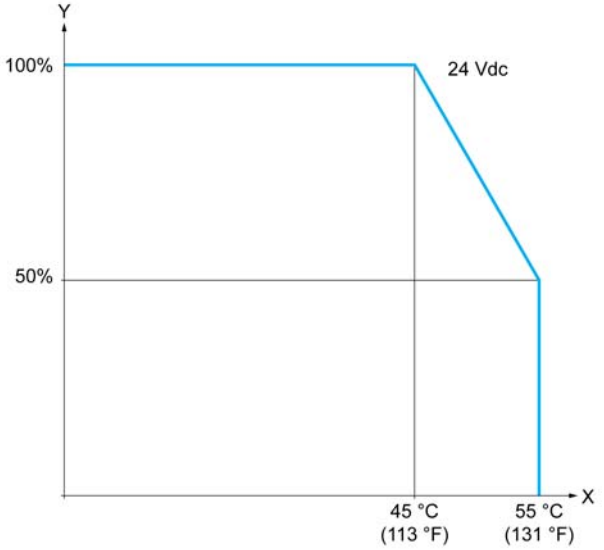

X Ambient temperature
Y Input simultaneous ON ratio

TM221C16R / TM221CE16R Wiring Diagrams

The following figure shows the sink wiring diagram (positive logic) of the inputs to the sensors for TM221C16R and TM221CE16R:

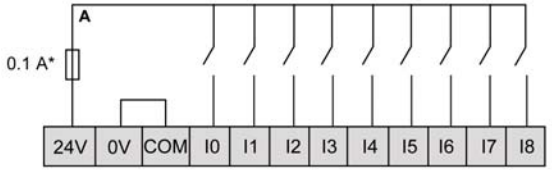

* Type T fuse

The following figure shows the source wiring diagram (negative logic) of the inputs to the sensors for TM221C16R and TM221CE16R:

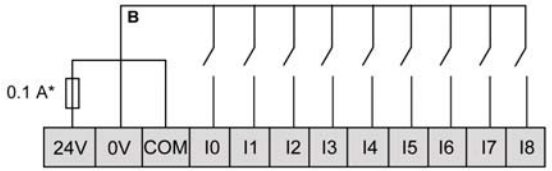

* Type T fuse

NOTE: The TM221C Logic Controller provides a 24 Vdc supply to the inputs.

The following figure shows the connection of the fast inputs:

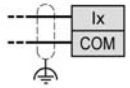

TM221C24R / TM221CE24R Wiring Diagrams

The following figure shows the sink wiring diagram (positive logic) of the inputs to the sensors for TM221C24R and TM221CE24R:

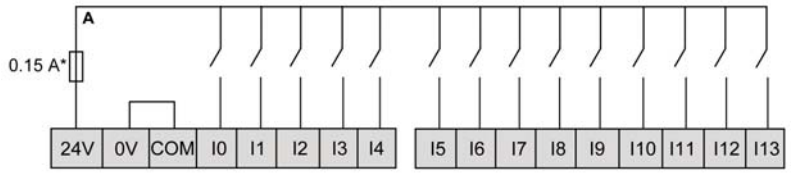

* Type T fuse

The following figure shows the source wiring diagram (negative logic) of the inputs to the sensors for TM221C24R and TM221CE24R:

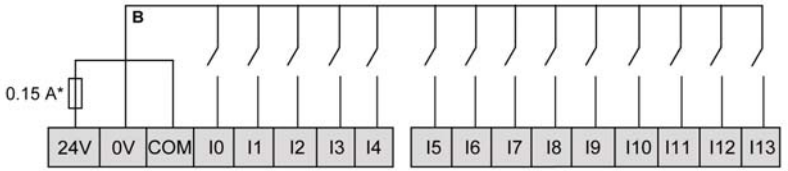

* Type T fuse

NOTE: The TM221C Logic Controller provides a 24 Vdc supply to the inputs.

The following figure shows the connection of the fast inputs:

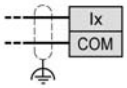

TM221C40R / TM221CE40R Wiring Diagrams

The following figure shows the sink wiring diagram (positive logic) of the inputs to the sensors for TM221C40R and TM221CE40R:

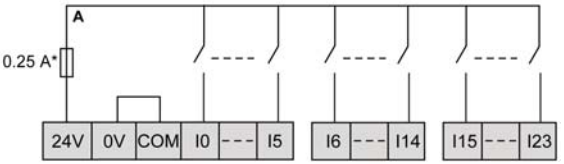

* Type T fuse

The following figure shows the source wiring diagram (negative logic) of the inputs to the sensors for TM221C40R and TM221CE40R:

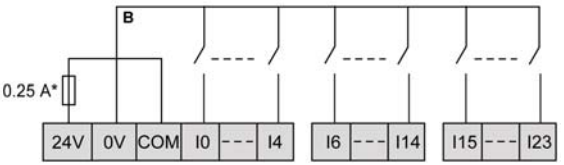

* Type T fuse

NOTE: The TM221C Logic Controller provides a 24 Vdc supply to the inputs.

The following figure shows the connection of the fast inputs:

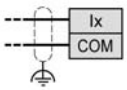

TM221C••R / TM221CE••R Encoder Examples Wiring Diagrams

The following figures show four wiring examples for TM221C••R and TM221CE••R:

- dual-phase encoder without index
- dual-phase encoder with a limit switch and no index
- dual-phase encoder with index
- dual-phase encoder with index and PNP sensor

TM221C••R / TM221CE••R with a dual-phase encoder without index:

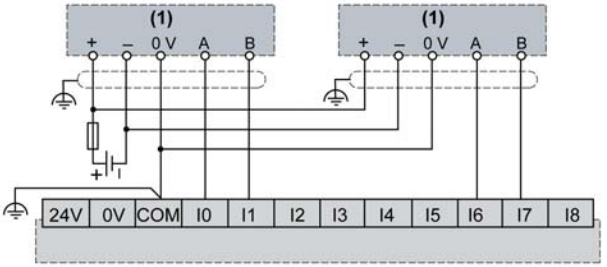

(1) Dual phase encoder without index

TM221C••R / TM221CE••R with a dual-phase encoder with a limit switch and no index:

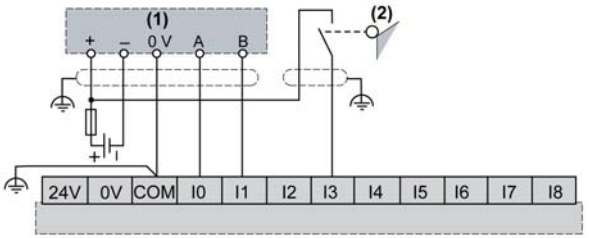

(1) Dual phase encoder without index
(2) Limit switch

TM221C••R / TM221CE••R with a dual-phase encoder with index:

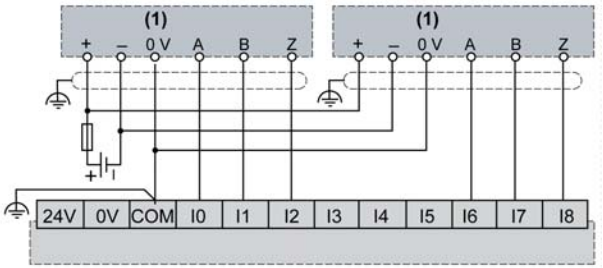

(1) Dual phase encoder with index

TM221C••R / TM221CE••R with a dual-phase encoder with index and PNP sensor:

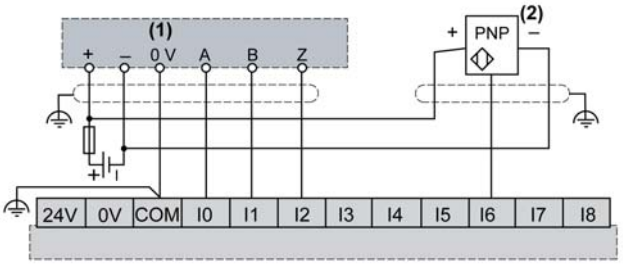

(1) Dual phase encoder with index
(2) PNP sensor

TM221C16T / TM221CE16T Wiring Diagrams

The following figure shows the connection of the inputs to the sensors for TM221C16T and TM221CE16T:

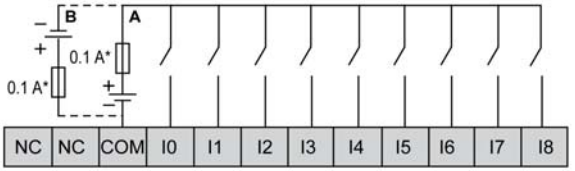

***** Type T fuse
A Sink wiring (positive logic).
B Source wiring (negative logic).

The following figure shows the connection of the fast inputs:

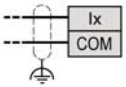

⚠ WARNING

UNINTENDED EQUIPMENT OPERATION

Do not connect wires to unused terminals and/or terminals indicated as “No Connection (N.C.)”.

Failure to follow these instructions can result in death, serious injury, or equipment damage.

TM221C24T / TM221CE24T Wiring Diagrams

The following figure shows the connection of the inputs to the sensors for TM221C24T and TM221CE24T:

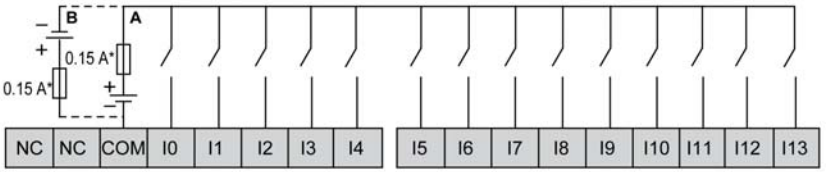

***** Type T fuse
A Sink wiring (positive logic).
B Source wiring (negative logic).

The following figure shows the connection of the fast inputs:

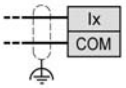

⚠ WARNING

UNINTENDED EQUIPMENT OPERATION

Do not connect wires to unused terminals and/or terminals indicated as “No Connection (N.C.)”.

Failure to follow these instructions can result in death, serious injury, or equipment damage.

TM221C40T / TM221CE40T Wiring Diagrams

The following figure shows the connection of the inputs to the sensors for TM221C40T and TM221CE40T:

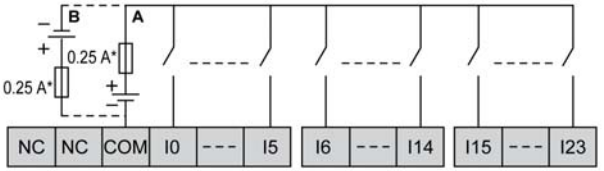

***** Type T fuse
A Sink wiring (positive logic).
B Source wiring (negative logic).

The following figure shows the connection of the fast inputs:

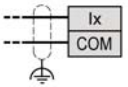

⚠ WARNING

UNINTENDED EQUIPMENT OPERATION

Do not connect wires to unused terminals and/or terminals indicated as “No Connection (N.C.)”.

Failure to follow these instructions can result in death, serious injury, or equipment damage.

TM221C••T / TM221CE••T Encoder Examples Wiring Diagrams

The following figures show four wiring examples for TM221C••T and TM221CE••T:

- dual-phase encoder without index
- dual-phase encoder with a limit switch and no index
- dual-phase encoder with index
- dual-phase encoder with index and PNP sensor

TM221C••T / TM221CE••T with a dual-phase encoder without index:

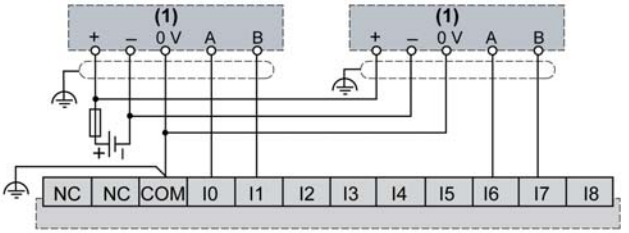

(1) Dual phase encoder without index

TM221C••T / TM221CE••T with a dual-phase encoder with a limit switch and no index:

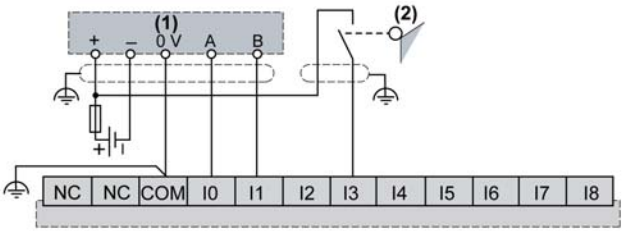

(1) Dual phase encoder without index
(2) Limit switch

TM221C••T / TM221CE••T with a dual-phase encoder with index:

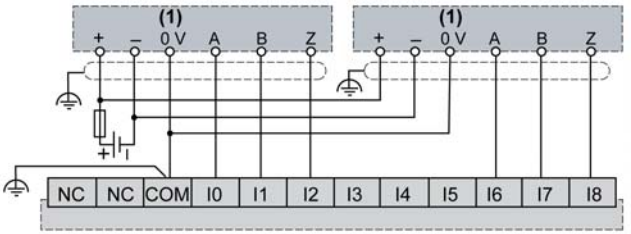

(1) Dual phase encoder with index

TM221C••T / TM221CE••T with a dual-phase encoder with index and PNP sensor:

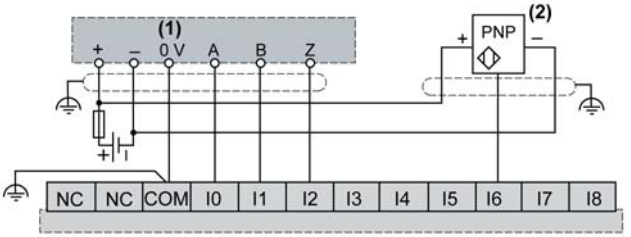

(1) Dual phase encoder with index
(2) PNP sensor

⚠ WARNING

UNINTENDED EQUIPMENT OPERATION

Do not connect wires to unused terminals and/or terminals indicated as “No Connection (N.C.)”.

Failure to follow these instructions can result in death, serious injury, or equipment damage.

Relay Outputs

Overview

The Modicon TM221C Logic Controller has 7, 10 or 16 relay outputs embedded:

Reference	Number of relay outputs
TM221C16R / TM221CE16R	7
TM221C24R / TM221CE24R	10
TM221C40R / TM221CE40R	16

For more information, refer to Output Management *(see page 57)*.

⚠ DANGER

FIRE HAZARD

- Use only the recommended wire sizes for the current capacity of the I/O channels and power supplies.
- For relay output (2 A) wiring, use conductors of at least 0.5 mm2 (AWG 20) with a temperature rating of at least 80 °C (176 °F).
- For common conductors of relay output wiring (7 A), or relay output wiring greater than 2 A, use conductors of at least 1.0 mm2 (AWG 16) with a temperature rating of at least 80 °C (176 °F).

Failure to follow these instructions will result in death or serious injury.

⚠ WARNING

UNINTENDED EQUIPMENT OPERATION

Do not exceed any of the rated values specified in the environmental and electrical characteristics tables.

Failure to follow these instructions can result in death, serious injury, or equipment damage.

Relay OutputsCharacteristics

The following table describes the characteristics of the TM221C Logic Controller with relay outputs:

Characteristic		Value		
		TM221C16R / TM221CE16R	TM221C24R / TM221CE24R	TM221C40R / TM221CE40R
Number of relay outputs		7 outputs	10 outputs	16 outputs
Number of channel groups		1 common line for Q0...Q3 1 common line for Q4...Q6	1 common line for Q0...Q3 1 common line for Q4...Q7 1 common line for Q8, Q9	1 common line for Q0...Q3 1 common line for Q4...Q7 1 common line for Q8...Q11 1 common line for Q12...Q15
Output type		Relay		
Contact type		NO (Normally Open)		
Rated output voltage		24 Vdc, 240 Vac		
Maximum voltage		125 Vdc, 277 Vac		
Minimum switching load		5 Vdc at 10 mA		
Rated output current		2 A		
Maximum output current		2 A per output		
		8 A for common 0 (Q0...Q3) 6 A for common 1 (Q4...Q6)	8 A for common 0 (Q0...Q3) 8 A for common 1 (Q4...Q7) 4 A for common 2 (Q8, Q9)	8 A per common
Maximum output frequency with maximum load		20 operations per minute		
Derating		No derating		
Turn on time		Max. 10 ms		
Turn off time		Max. 10 ms		
Contact resistance		30 mΩ max		
Mechanical life		20 million operations		
Electrical life	Under resistive load	See power limitation *(see page 183)*		
	Under inductive load			
Protection against short circuit		No		

Characteristic		Value		
		TM221C16R / TM221CE16R	TM221C24R / TM221CE24R	TM221C40R / TM221CE40R
Isolation	Between output and internal logic	500 Vac		
	Between channel groups	500 Vac		
Connection type		Removable screw terminal blocks		
Connector insertion/removal durability		Over 100 times		
Cable	Type	Unshielded		
	Length	Max. 30 m (98 ft)		
NOTE: Refer to Protecting Outputs from Inductive Load Damage *(see page 96)* for additional information concerning output protection.				

Power Limitation

The following table describes the power limitation of the relay outputs depending on the voltage, the type of load, and the number of operations required.

These controllers do not support capacitive loads.

⚠ WARNING

RELAY OUTPUTS WELDED CLOSED

- Always protect relay outputs from inductive alternating current load damage using an appropriate external protective circuit or device.
- Do not connect relay outputs to capacitive loads.

Failure to follow these instructions can result in death, serious injury, or equipment damage.

Power Limitations				
Voltage	**24 Vdc**	**120 Vac**	**240 Vac**	**Number of operations**
Power of resistive loads AC-12	–	240 VA 80 VA	480 VA 160 VA	100,000 300,000
Power of inductive loads AC-15 (cos φ = 0.35)	–	60 VA 18 VA	120 VA 36 VA	100,000 300,000
Power of inductive loads AC-14 (cos φ = 0.7)	–	120 VA 36 VA	240 VA 72 VA	100,000 300,000

Power Limitations				
Power of resistive loads DC-12	48 W 16 W	–	–	100,000 300,000
Power of inductive loads DC-13 L/R = 7 ms	24 W 7.2 W	–	–	100,000 300,000

Relay Outputs Wiring Diagrams - Positive Logic (Sink)

The following figure shows the sink wiring diagram (positive logic) of the outputs of the to the load for the TM221C16R / TM221CE16R:

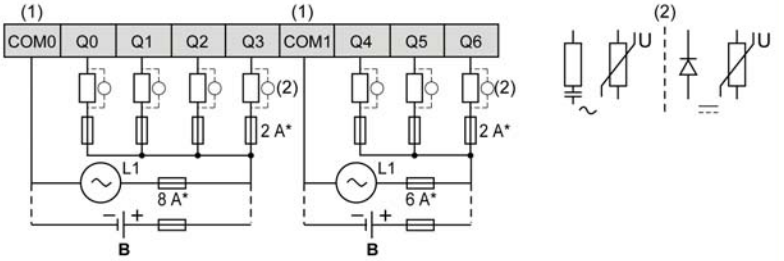

* Type T fuse

(1) The COM1 and COM2 terminals are **not** connected internally.

(2) To improve the life time of the contacts, and to protect from potential inductive load damage, you must connect a free wheeling diode in parallel to each inductive DC load or an RC snubber in parallel of each inductive AC load

The following figure shows the sink wiring diagram (positive logic) of the outputs to the load for the TM221C24R / TM221CE24R:

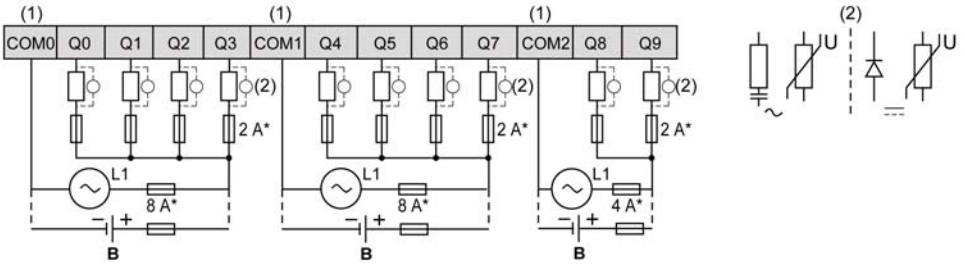

* Type T fuse

(1) The COM0, COM1 and COM2 terminals are **not** connected internally.

(2) To improve the life time of the contacts, and to protect from potential inductive load damage, you must connect a free wheeling diode in parallel to each inductive DC load or an RC snubber in parallel of each inductive AC load

The following figure shows the sink wiring diagram (positive logic) of the outputs to the load for the TM221C40R / TM221CE40R:

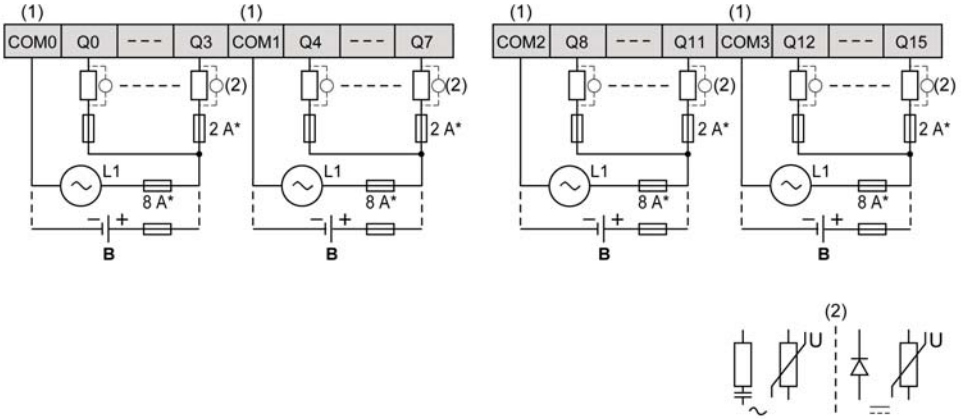

* Type T fuse

(1) The COM0, COM1, COM2 and COM3 terminals are **not** connected internally.

(2) To improve the life time of the contacts, and to protect from potential inductive load damage, you must connect a free wheeling diode in parallel to each inductive DC load or an RC snubber in parallel of each inductive AC load

NOTE: The assigned fuse values have been specified for the maximum current characteristics of the controller I/O and associated commons. You may have other considerations that are applicable based on the unique types of input and output devices you connect, and you should size your fuses accordingly.

Relay Outputs Wiring Diagrams - Negative Logic (Source)

The following figure shows the source wiring diagram (negative logic) of the outputs of the to the load for the TM221C16R / TM221CE16R:

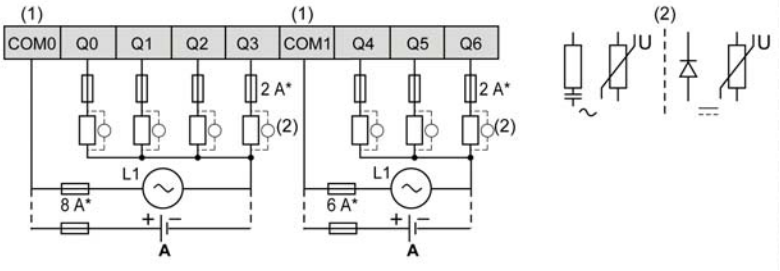

* Type T fuse

(1) The COM1 and COM2 terminals are **not** connected internally.

(2) To improve the life time of the contacts, and to protect from potential inductive load damage, you must connect a free wheeling diode in parallel to each inductive DC load or an RC snubber in parallel of each inductive AC load

The following figure shows the source wiring diagram (negative logic) of the outputs to the load for the TM221C24R / TM221CE24R:

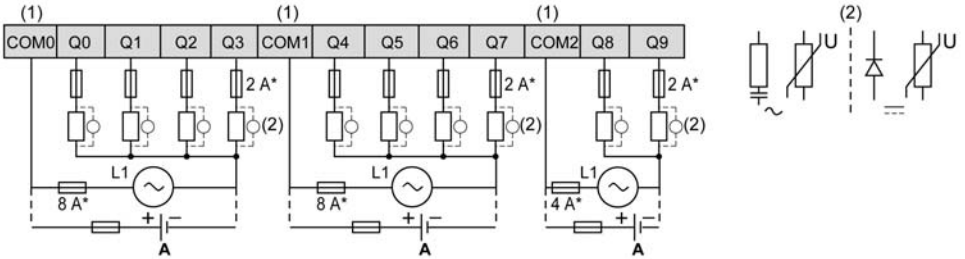

* Type T fuse

(1) The COM0, COM1 and COM2 terminals are **not** connected internally.

(2) To improve the life time of the contacts, and to protect from potential inductive load damage, you must connect a free wheeling diode in parallel to each inductive DC load or an RC snubber in parallel of each inductive AC load

The following figure shows the source wiring diagram (negative logic) of the outputs to the load for the TM221C40R / TM221CE40R:

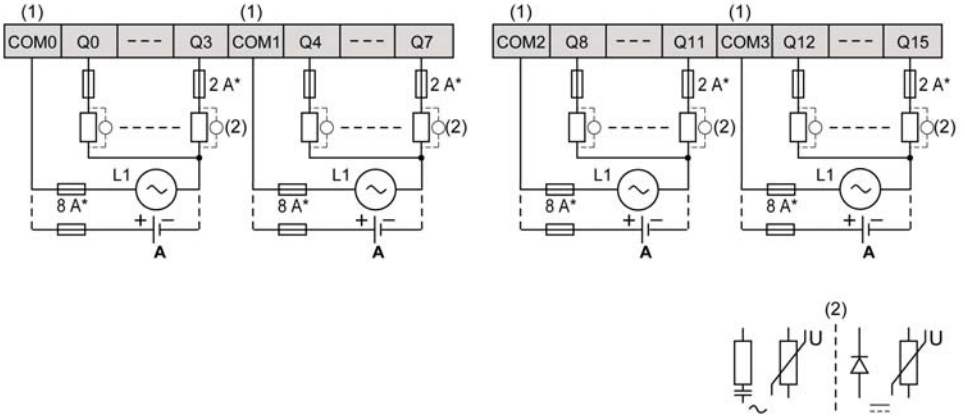

* Type T fuse

(1) The COM0, COM1, COM2 and COM3 terminals are **not** connected internally.

(2) To improve the life time of the contacts, and to protect from potential inductive load damage, you must connect a free wheeling diode in parallel to each inductive DC load or an RC snubber in parallel of each inductive AC load

NOTE: The assigned fuse values have been specified for the maximum current characteristics of the controller I/O and associated commons. You may have other considerations that are applicable based on the unique types of input and output devices you connect, and you should size your fuses accordingly.

Regular and Fast Transistor Outputs

Overview

The Modicon TM221C Logic Controller has regular and fast transistor outputs embedded:

Reference	Total number of digital outputs	Transistor outputs	Fast outputs
TM221C16T / TM221CE16T	7	5	2
TM221C24T / TM221CE24T	10	8	2
TM221C40T / TM221CE40T	16	14	2

For more information, refer to Output Management *(see page 57)*.

⚠ DANGER

FIRE HAZARD

- Use only the recommended wire sizes for the current capacity of the I/O channels and power supplies.
- For relay output (2 A) wiring, use conductors of at least 0.5 mm2 (AWG 20) with a temperature rating of at least 80 °C (176 °F).
- For common conductors of relay output wiring (7 A), or relay output wiring greater than 2 A, use conductors of at least 1.0 mm2 (AWG 16) with a temperature rating of at least 80 °C (176 °F).

Failure to follow these instructions will result in death or serious injury.

⚠ WARNING

UNINTENDED EQUIPMENT OPERATION

Do not exceed any of the rated values specified in the environmental and electrical characteristics tables.

Failure to follow these instructions can result in death, serious injury, or equipment damage.

Regular Transistor Output Characteristics

The following table describes the characteristics of the TM221C Logic Controller regular transistor outputs:

Characteristic		Value		
		TM221C16T / TM221CE16T	**TM221C24T / TM221CE24T**	**TM221C40T / TM221CE40T**
Number of regular outputs		5 outputs (Q2...Q6)	8 outputs (Q2...Q9)	14 outputs (Q2...Q15)
Number of channel groups		1 common line for Q0...Q6	1 common line for Q0..Q9	1 common line for Q0..Q7 1 common line for Q8...Q15
Output type		Transistor		
Logic type		Source		
Rated output voltage		24 Vdc		
Output voltage range		19.2...28.8 Vdc		
Rated output current		0.5 A		
Total output current		3.5 A for channel group Q0...Q6	5 A for channel group Q0...Q9	4 A for channel group Q0...Q7 4 A for channel group Q8...Q15
Voltage drop		1 Vdc max		
Leakage current when switched off		0.1 mA		
Maximum power of filament lamp		12 W max		
Derating		See derating curves *(see page 190)*		
Turn on time	Q2, Q3	Max. 50 µs		
	Other regular outputs	Max. 300 µs		
Turn off time	Q2, Q3	Max. 50 µs		
	Other regular outputs	Max. 300 µs		
Protection against short circuit		Yes		
Short circuit output peak current		1.3 A		
Automatic rearming after short circuit or overload		Yes, every 1 s		
Clamping voltage		Max. 39 Vdc ± 1 Vdc		
Switching frequency	Under resistive load	100 Hz max.		
Isolation	Between output and internal logic	500 Vac		
Connection type		Removable screw terminal blocks		

Characteristic		Value		
		TM221C16T / TM221CE16T	**TM221C24T / TM221CE24T**	**TM221C40T / TM221CE40T**
Connector insertion/removal durability		Over 100 times		
Cable	Type	Unshielded		
	Length	Max 30 m (98 ft)		
NOTE: Refer to Protecting Outputs from Inductive Load Damage *(see page 96)* for additional information concerning output protection.				

Fast Transistor Output Characteristics

The following table describes the characteristics of the TM221C Logic Controller fast transistor outputs:

Characteristic		Value
Number of fast outputs		2 outputs (Q0, Q1)
Number of channel groups		1 common line
Output type		Transistor
Logic type		Source
Rated output voltage		24 Vdc
Output voltage range		19.2...28.8 Vdc
Rated output current		0.5 A
Total output current	TM221C16T / TM221CE16T	3.5 A for channel group Q0...Q6
	TM221C24T / TM221CE24T	5 A for channel group Q0...Q9
	TM221C40T / TM221CE40T	4 A for channel group Q0...Q7 4 A for channel group Q8...Q15
Maximum power of filament lamp		2.4 W max
Derating		See derating curves *(see page 190)*
Turn on time		Max. 5 µs
Turn off time		Max. 5 µs
Protection against short circuit		Yes
Short circuit output peak current		1.3 A max.
Automatic rearming after short circuit or overload		Yes, every 1 s
Protection against reverse polarity		Yes
Clamping voltage		Typ. 39 Vdc +/- 1 Vdc
Maximum output frequency	PWM/PLS	100 kHz

Characteristic		Value
Isolation	Between output and internal logic	500 Vac
Connection type		Removable screw terminal blocks
Connector insertion/removal durability		Over 100 times
Cable	Type	Shielded, including 24 Vdc power supply
	Length	Maximum 3 m (9.84 ft)
NOTE: Refer to Protecting Outputs from Inductive Load Damage *(see page 96)* for additional information concerning output protection.		

Derating Curves (No Cartridge)

The following figures show the derating curves of the embedded digital outputs for a configuration without cartridge:

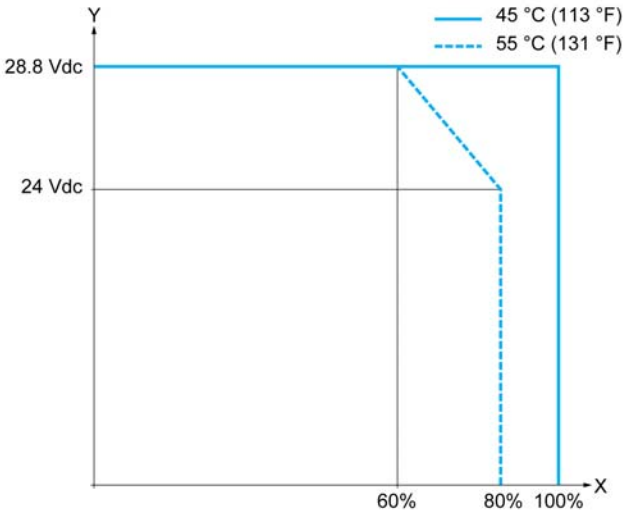

X Output simultaneous ON ratio
Y Output voltage

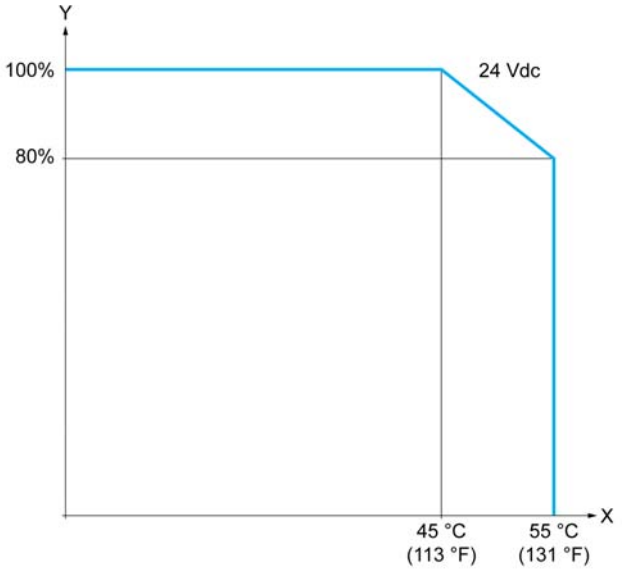

X Ambient temperature
Y Output simultaneous ON ratio

Derating Curves (with Cartridge)

The following figures show the derating curves of the embedded digital outputs for a configuration with cartridge:

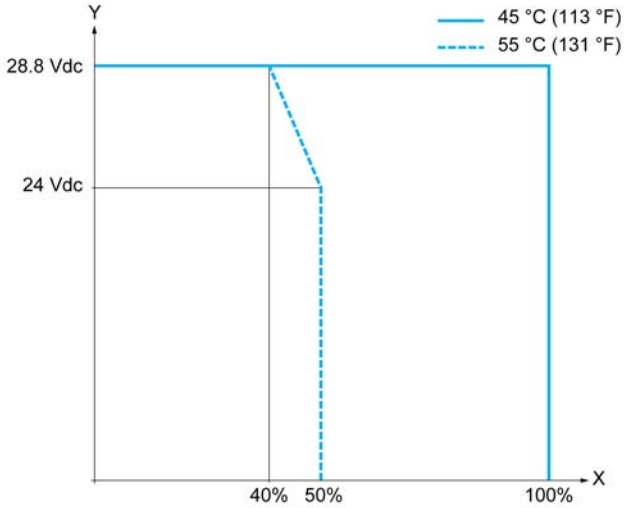

X Output simultaneous ON ratio
Y Output voltage

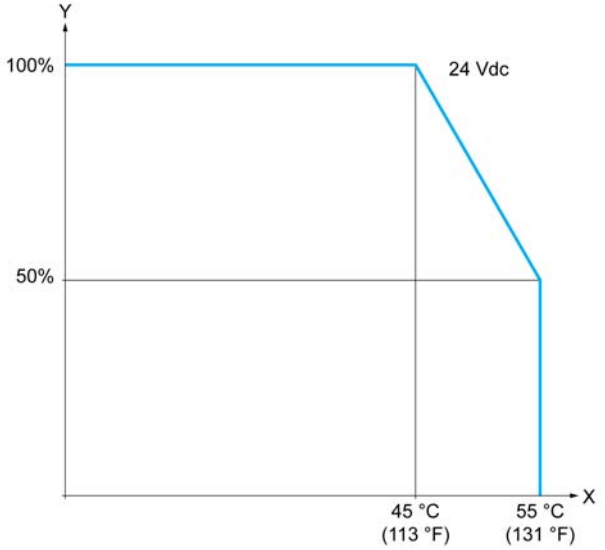

X Ambient temperature
Y Output simultaneous ON ratio

Transistor Outputs Wiring Diagrams

The following figure shows the connection of the outputs to the load for the TM221C16T / TM221CE16T:

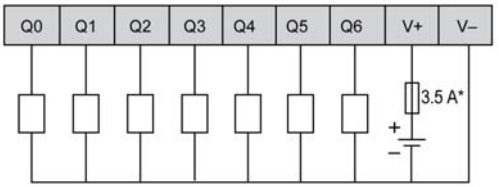

* Type T fuse

The following figure shows the connection of the fast outputs:

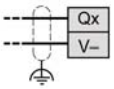

The following figure shows the connection of the outputs to the load for the TM221C24T / TM221CE24T:

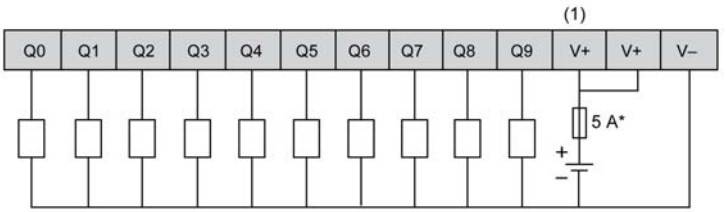

* Type T fuse

(1) The V+ terminals are connected internally.

The following figure shows the connection of the fast outputs:

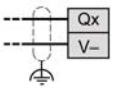

The following figure shows the connection of the outputs to the load for the TM221C40T / TM221CE40T:

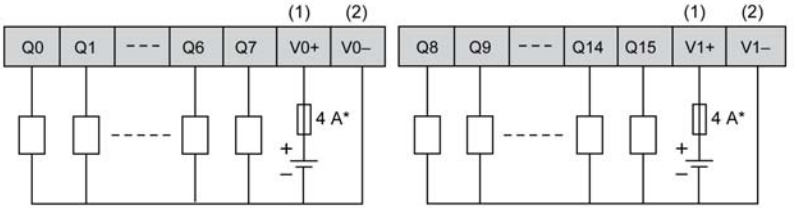

***** Type T fuse
(1) The V0+ and V1+ terminals are **not** connected internally.
(2) The V0- and V1- terminals are **not** connected internally.

The following figure shows the connection of the fast outputs:

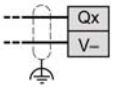

Analog Inputs

Overview

Mounting the Analog Cables

The following procedure describes how to mount the analog cables:

Step	Action
1	Use a screw-driver to remove the protective cover. 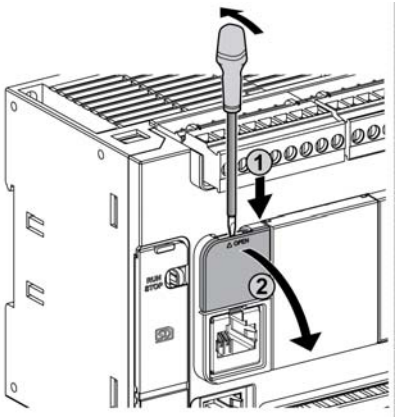
2	Push until you hear it “click”. 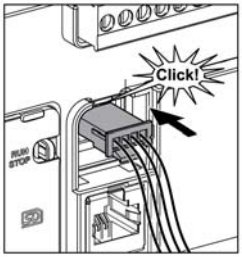
3	Replace the protective cover. 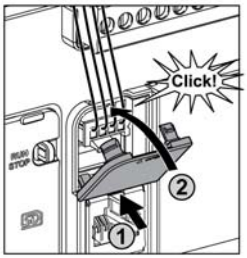

Analog Input Characteristics

The following table describes the characteristics of the M221 Logic Controller with analog inputs:

Characteristic		Voltage Input
Number of maximum inputs		2 inputs
Input type		Single-ended
Rated input range		0...+10 Vdc
Digital resolution		10 bits
Input value of LSB		10 mV
Input impedance		100 kΩ
Input delay time		12 ms
Sample duration time		1 ms per channel + 1 scan time
Accuracy		± 1 % of the full scale
Noise resistance - maximum temporary deviation during perturbations		± 5 % maximum of the full scale when EMC perturbation is applied to the power and I/O wiring
Isolation	Between input and internal logic	Not isolated
Connection type		Specific connector and cable (supplied)
Connector insertion/removal durability		Over 100 times
Cable	Type	Proprietary (supplied)
	Length	1 m (3.3 ft)

Analog Inputs Wiring Diagram

The following figure shows the wiring diagram of the M221 Logic Controller analog inputs:

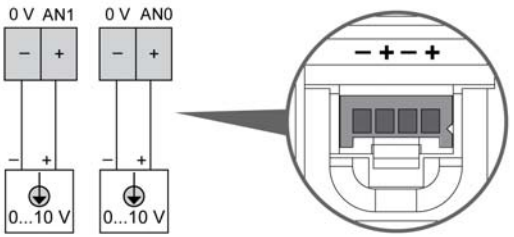

The (-) poles are connected internally.

Pin	Wire Color
0 V	Black
AN1	Red

Pin	Wire Color
0 V	Black
AN0	Red

For more information, refer to the Wiring Rules and Recommendation *(see page 92)*.

Part III
Modicon TM221M Logic Controller

What Is in This Part?

This part contains the following chapters:

Chapter	Chapter Name	Page
17	TM221M16R / TM221M16RG	201
18	TM221ME16R / TM221ME16RG	219
19	TM221M16T / TM221M16TG	237
20	TM221ME16T / TM221ME16TG	257
21	TM221M32TK	277
22	TM221ME32TK	301

Chapter 17
TM221M16R / TM221M16RG

Overview

This chapter describes the TM221M16R / TM221M16RG controllers.

What Is in This Chapter?

This chapter contains the following topics:

Topic	Page
TM221M16R / TM221M16RG Presentation	202
TM221M16R / TM221M16RG Digital Inputs	206
TM221M16R / TM221M16RG Digital Outputs	210
TM221M16R / TM221M16RG Analog Inputs	214

TM221M16R / TM221M16RG Presentation

Overview

The following features are integrated into the TM221M16R (screw) and TM221M16RG (spring) controllers:

- 8 digital inputs
  - 4 regular inputs
  - 4 fast inputs (HSC)
- 8 digital outputs
  - 8 relay outputs
- 2 analog inputs
- Communication port
  - 2 serial line ports
  - 1 USB mini-B programming port

Description

The following figure shows the different components of the controllers:

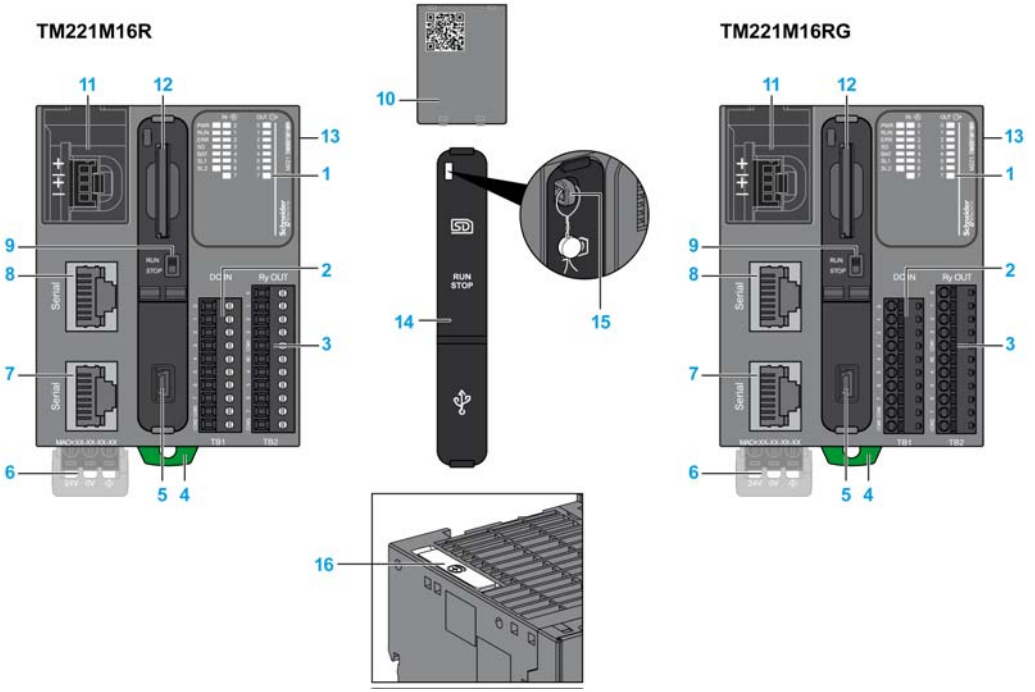

N°	Description	Refer to
1	Status LEDs	–
2	Input removable terminal block	Rules for Removable Screw Terminal Block *(see page 93)* Rules for Removable Spring Terminal Block *(see page 94)*
3	Output removable terminal block	
4	Clip-on lock for 35 mm (1.38 in.) top hat section rail (DIN-rail)	DIN Rail *(see page 83)*
5	USB mini-B programming port / For terminal connection to a programming PC (SoMachine Basic)	USB mini-B programming port *(see page 328)*
6	24 Vdc power supply	Power supply *(see page 98)*
7	Serial line port 2 / RJ45 connector (RS-485)	Serial line 2 *(see page 337)*
8	Serial line port 1 / RJ45 connector (RS-232 or RS-485)	Serial line 1 *(see page 333)*
9	Run/Stop switch	Run/Stop switch *(see page 60)*
10	Removable analog inputs cover	–
11	2 analog inputs	Analog Inputs *(see page 214)*
12	SD Card slot	SD Card Slot *(see page 62)*
13	I/O expansion connector	–
14	Protective cover (SD Card slot, Run/Stop switch and USB mini-B programming port)	–
15	Locking hook	–
16	Battery holder	Installing and Replacing the Battery *(see page 49)*

Status LEDs

The following figure shows the status LEDs:

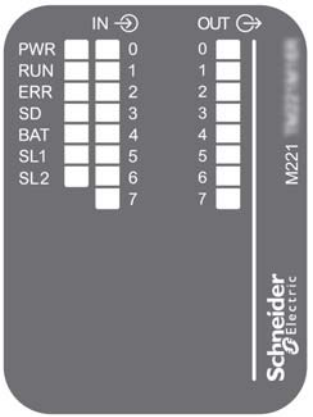

The following table describes the status LEDs:

Label	Function Type	Color	Status	Description		
				Controller States[1]	**Prg Port Communication**	**Application Execution**
PWR	Power	Green	On	Indicates that power is applied.		
			Off	Indicates that power is removed.		
RUN	Machine Status	Green	On	Indicates that the controller is running a valid application.		
			Flashing	Indicates that the controller has a valid application that is stopped.		
			Off	Indicates that the controller is not programmed		
ERR	Error	Red	On*	EXCEPTION	Restricted	NO
			Flashing (with RUN status LED Off)	INTERNAL ERROR	Restricted	NO
			Slow flashing	Minor error detected	Yes	Depends on the RUN status LED
			1 single flash	No application	Yes	Yes
SD	SD Card Access *(see page 62)*	Green	On	Indicates that the SD card is being accessed		
			Flashing	Indicates that an error was detected during the SD card operation.		
			Off	Indicates no access (idle) or no card is present.		
BAT	Battery *(see page 48)*	Red	On	Indicates that the battery needs to be replaced.		
			Flashing	Indicates that the battery charge is low.		
			Off	Indicates that the battery is OK.		
SL1	Serial line 1 *(see page 333)*	Green	On	Indicates the status of Serial line 1		
			Flashing	Indicates activity on Serial line 1		
			Off	Indicates no serial communication		
SL2	Serial line 2 *(see page 337)*	Green	On	Indicates the status of Serial line 2		
			Flashing	Indicates activity on Serial line 2		
			Off	Indicates no serial communication		
* ERR LED is also On during booting process						

[1] For more information about the controller state description, refer to the M221 Logic Controller - Programming Guide.

Dimensions

The following figure shows the external dimensions of the controllers:

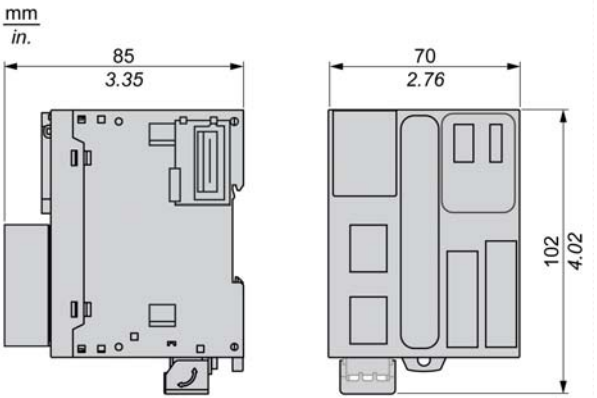

TM221M16R / TM221M16RG Digital Inputs

Overview

M221 Logic Controller embedded digital inputs:

- 4 regular inputs
- 4 fast inputs which can be used as 100 kHz HSC inputs

For more information on Input Management *(see page 55)*.

⚠ DANGER

FIRE HAZARD

- Use only the recommended wire sizes for the current capacity of the I/O channels and power supplies.
- For relay output (2 A) wiring, use conductors of at least 0.5 mm2 (AWG 20) with a temperature rating of at least 80 °C (176 °F).
- For common conductors of relay output wiring (7 A), or relay output wiring greater than 2 A, use conductors of at least 1.0 mm2 (AWG 16) with a temperature rating of at least 80 °C (176 °F).

Failure to follow these instructions will result in death or serious injury.

⚠ WARNING

UNINTENDED EQUIPMENT OPERATION

Do not exceed any of the rated values specified in the environmental and electrical characteristics tables.

Failure to follow these instructions can result in death, serious injury, or equipment damage.

Input Management Functions Availability

Embedded digital inputs can be configured as functions (Run/Stop, events, HSC, PWM, PLS).

Inputs not configured as functions are used as regular inputs.

The following table shows the possible usage of the controller digital inputs:

Function		Input Function				HSC/PWM/PLS
		None	Run/Stop	Latch	Event	
Fast Input[1]	I0	X	X	–	–	HSC
	I1	X	X	–	–	HSC
Regular Input	I2	X	X	X	X	–
	I3	X	X	X	X	–
	I4	X	X	X	X	–
	I5	X	X	X	X	–
Fast Input[1]	I6	X	X	–	–	HSC
	I7	X	X	–	–	HSC

X Yes
– No
1 Can also be used as a regular input

You can use filters and functions to manage the controller inputs *(see page 55)*.

Regular Input Characteristics

The following table describes the characteristics of the TM221M Logic Controller regular inputs:

Characteristic		Value
Number of regular inputs		4 inputs (I2, I3, I4, I5)
Number of channel groups		1 common line for I0...I7
Input type		Type 1 (IEC/EN 61131-2)
Logic type		Sink/Source
Input voltage range		24 Vdc
Rated input voltage		19.2...28.8 Vdc
Rated input current		7 mA
Input impedance		3.4 kΩ
Input limit values	Voltage at state 1	> 15 Vdc (15...28.8 Vdc)
	Voltage at state 0	< 5 Vdc (0...5 Vdc)
	Current at state 1	> 2.5 mA
	Current at state 0	< 1.0 mA

Characteristic		Value
Derating		No derating
Turn on time		35 µs + filter value[1]
Turn off time		35 µs + filter value[1]
Isolation	Between input and internal logic	500 Vac
Connection type	TM221M16R	Removable screw terminal blocks
	TM221M16RG	Removable spring terminal blocks
Connector insertion/removal durability		Over 100 times
Cable	Type	Unshielded
	Length	Maximum 30 m (98 ft)
[1] For more information, refer to Integrator Filter Principle *(see page 55)*		

Fast Input Characteristics

The following table describes the characteristics of the TM221M Logic Controller fast inputs:

Characteristic		Value
Number of fast inputs		4 inputs (I0, I1, I6, I7)
Number of channel groups		1 common line for I0...I7
Input type		Type 1 (IEC/EN 61131-2)
Logic type		Sink/Source
Rated input voltage		24 Vdc
Input voltage range		19.2...28.8 Vdc
Rated input current		4.5 mA
Input impedance		4.9 kΩ
Input limit values	Voltage at state 1	> 15 Vdc (15...28.8 Vdc)
	Voltage at state 0	< 5 Vdc (0...5 Vdc)
	Current at state 1	> 2.5 mA
	Current at state 0	< 1.0 mA
Derating		No derating
Turn on time		5 µs + filter value[1]
Turn off time		5 µs + filter value[1]
HSC maximum frequency	A/B phase	50 kHz (20 µs)
	Pulse/Direction	100 kHz
	Single phase	100 kHz

Characteristic		Value
HSC supported operation mode		• Up/Down counter • Bi-phase counter • Single counter • Frequency meter
Isolation	Between input and internal logic	500 Vac
Connection type	TM221M16R	Removable screw terminal block
	TM221M16RG	Removable spring terminal block
Connector insertion/removal durability		Over 100 times
Cable	Type	Shielded, including the 24 Vdc power supply
	Length	Maximum 10 m (32.8 ft)
[1] For more information, refer to Integrator Filter Principle *(see page 55)*		

Wiring Diagram

The following figure shows the connection of the inputs to the sensors:

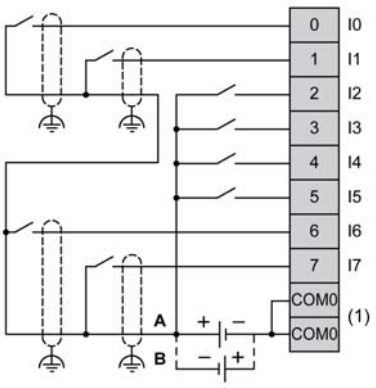

(1) The COM0 terminals are connected internally.
A Sink wiring (positive logic).
B Source wiring (negative logic).

TM221M16R / TM221M16RG Digital Outputs

Overview

M221 Logic Controller with 8 relay outputs embedded.

For more information on Output Management *(see page 57)*.

⚠ DANGER

FIRE HAZARD

- Use only the recommended wire sizes for the current capacity of the I/O channels and power supplies.
- For relay output (2 A) wiring, use conductors of at least 0.5 mm2 (AWG 20) with a temperature rating of at least 80 °C (176 °F).
- For common conductors of relay output wiring (7 A), or relay output wiring greater than 2 A, use conductors of at least 1.0 mm2 (AWG 16) with a temperature rating of at least 80 °C (176 °F).

Failure to follow these instructions will result in death or serious injury.

⚠ WARNING

UNINTENDED EQUIPMENT OPERATION

Do not exceed any of the rated values specified in the environmental and electrical characteristics tables.

Failure to follow these instructions can result in death, serious injury, or equipment damage.

Relay Output Characteristics

The following table describes the characteristics of the TM221M Logic Controller with relay outputs:

Characteristic	Value
Number of relay outputs	8 outputs
Number of channel groups	1 common line for Q0...Q3 1 common line for Q4...Q7
Output type	Relay
Contact type	NO (Normally Open)
Rated output voltage	24 Vdc, 240 Vac
Maximum voltage	30 Vdc, 264 Vac

Characteristic		Value
Minimum switching load		5 Vdc at 10 mA
Rated output current		2 A
Maximum output current		2 A per output
		7 A per common
Maximum output frequency with maximum load		20 operations per minute
Derating		No derating
Turn on time		Max. 10 ms
Turn off time		Max. 10 ms
Contact resistance		30 mΩ max
Mechanical life		20 million operations
Electrical life	Under resistive load	See power limitation *(see page 212)*
	Under inductive load	
Protection against short circuit		No
Isolation	Between output and internal logic	500 Vac
	Between channel groups	500 Vac
Connection type	TM221M16R	Removable screw terminal blocks
	TM221M16RG	Removable spring terminal blocks
Connector insertion/removal durability		Over 100 times
Cable	Type	Unshielded
	Length	Max. 30 m (98 ft)
NOTE: Refer to Protecting Outputs from Inductive Load Damage *(see page 96)* for additional information concerning output protection.		

Power Limitation

The following table describes the power limitation of the TM221M16R / TM221M16RG relay outputs depending on the voltage, the type of load, and the number of operations required.

These controllers do not support capacitive loads.

⚠ WARNING

RELAY OUTPUTS WELDED CLOSED

- Always protect relay outputs from inductive alternating current load damage using an appropriate external protective circuit or device.
- Do not connect relay outputs to capacitive loads.

Failure to follow these instructions can result in death, serious injury, or equipment damage.

Power Limitations				
Voltage	**24 Vdc**	**120 Vac**	**240 Vac**	**Number of operations**
Power of resistive loads AC-12	–	240 VA 80 VA	480 VA 160 VA	100,000 300,000
Power of inductive loads AC-15 (cos φ = 0.35)	–	60 VA 18 VA	120 VA 36 VA	100,000 300,000
Power of inductive loads AC-14 (cos φ = 0.7)	–	120 VA 36 VA	240 VA 72 VA	100,000 300,000
Power of resistive loads DC-12	48 W 16 W	–	–	100,000 300,000
Power of inductive loads DC-13 L/R = 7 ms	24 W 7.2 W	–	–	100,000 300,000

Wiring Diagram

The following figure shows the connection of the outputs to the load:

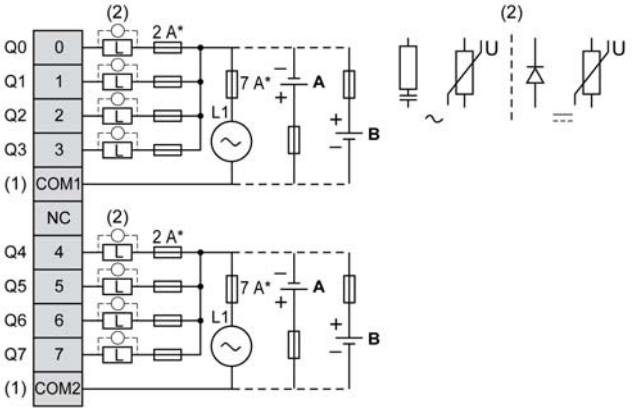

***** Type T fuse

(1) The COM1 and COM2 terminals are **not** connected internally.

(2) To improve the life time of the contacts, and to protect from potential inductive load damage, you must connect a free wheeling diode in parallel to each inductive DC load or an RC snubber in parallel of each inductive AC load

A Source wiring (positive logic).

B Sink wiring (negative logic).

NOTE: The assigned fuse values have been specified for the maximum current characteristics of the controller I/O and associated commons. You may have other considerations that are applicable based on the unique types of input and output devices you connect, or conformance to local, national or applicable certification regulations and standards, and you should size your fuses accordingly.

⚠ WARNING
UNINTENDED EQUIPMENT OPERATION Do not connect wires to unused terminals and/or terminals indicated as “No Connection (N.C.)”. **Failure to follow these instructions can result in death, serious injury, or equipment damage.**

TM221M16R / TM221M16RG Analog Inputs

Overview

The M221 Logic Controllers have 2 analog inputs embedded.

⚠ DANGER

FIRE HAZARD

- Use only the recommended wire sizes for the current capacity of the I/O channels and power supplies.
- For relay output (2 A) wiring, use conductors of at least 0.5 mm2 (AWG 20) with a temperature rating of at least 80 °C (176 °F).
- For common conductors of relay output wiring (7 A), or relay output wiring greater than 2 A, use conductors of at least 1.0 mm2 (AWG 16) with a temperature rating of at least 80 °C (176 °F).

Failure to follow these instructions will result in death or serious injury.

⚠ WARNING

UNINTENDED EQUIPMENT OPERATION

Do not exceed any of the rated values specified in the environmental and electrical characteristics tables.

Failure to follow these instructions can result in death, serious injury, or equipment damage.

The following procedure describes how to mount the analog cables:

Step	Action
1	Use a screw-driver to remove the protective cover. 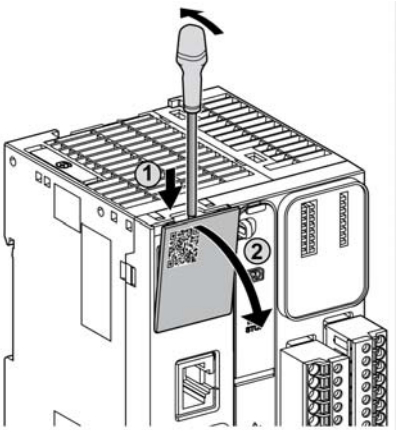
2	Push until you hear it “click”. 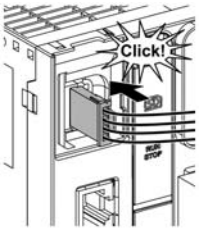
3	Replace the protective cover. 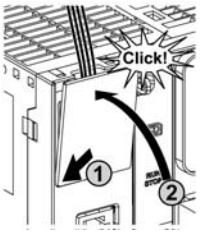

Analog Input Characteristics

The following table describes the characteristics of the M221 Logic Controller with analog inputs:

Characteristic		Voltage Input
Number of maximum inputs		2 inputs
Input type		Single-ended
Rated input range		0...+10 Vdc
Digital resolution		10 bits
Input value of LSB		10 mV
Input impedance		100 kΩ
Input delay time		12 ms
Sample duration time		1 ms per channel + 1 scan time
Accuracy		± 1 % of the full scale
Noise resistance - maximum temporary deviation during perturbations		± 5 % maximum of the full scale when EMC perturbation is applied to the power and I/O wiring
Isolation	Between input and internal logic	Not isolated
Connection type		Specific connector and cable (supplied)
Connector insertion/removal durability		Over 100 times
Cable	Type	Proprietary (supplied)
	Length	1 m (3.3 ft)

Wiring Diagram

The following figure shows the wiring diagram of the M221 Logic Controller analog inputs:

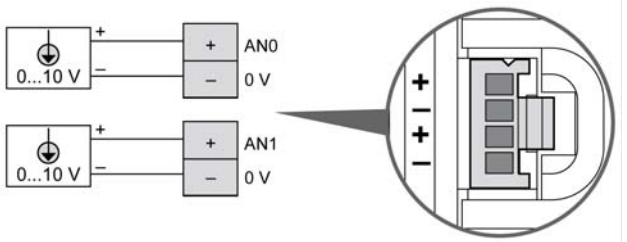

The (-) poles are connected internally.

Pin	Wire Color
AN0	Red
0 V	Black

Pin	Wire Color
AN1	Red
0 V	Black

For more information, refer to the Wiring Rules and Recommendation *(see page 92)*.

Chapter 18
TM221ME16R / TM221ME16RG

Overview

This chapter describes the TM221ME16R / TM221ME16RG controllers.

What Is in This Chapter?

This chapter contains the following topics:

Topic	Page
TM221ME16R / TM221ME16RG Presentation	220
TM221ME16R / TM221ME16RG Digital Inputs	224
TM221ME16R / TM221ME16RG Digital Outputs	228
TM221ME16R / TM221ME16RG Analog Inputs	232

TM221ME16R / TM221ME16RG Presentation

Overview

The following features are integrated into the TM221ME16R (screw) and TM221ME16RG (spring) controllers:

- 8 digital inputs
  - 4 regular inputs
  - 4 fast inputs (HSC)
- 8 digital outputs
  - 8 relay outputs
- 2 analog inputs
- Communication port
  - 1 serial line port
  - 1 USB mini-B programming port
  - 1 Ethernet port

Description

The following figure shows the different components of the controllers:

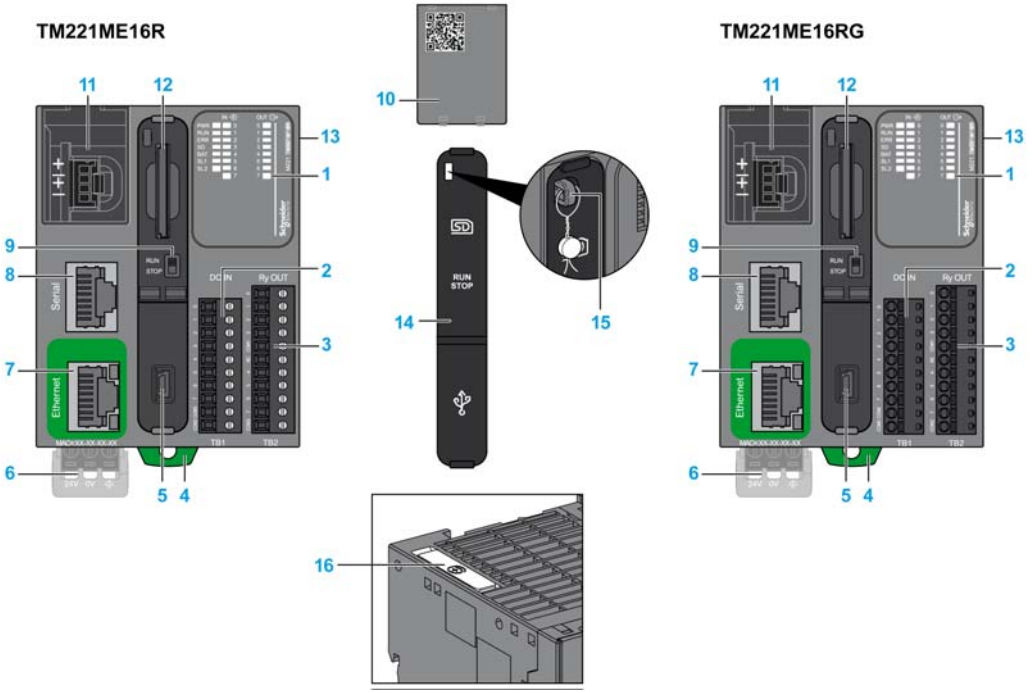

N°	Description	Refer to
1	Status LEDs	–
2	Input removable terminal block	Rules for Removable Screw Terminal Block *(see page 93)* Rules for Removable Spring Terminal Block *(see page 94)*
3	Output removable terminal block	
4	Clip-on lock for 35 mm (1.38 in.) top hat section rail (DIN-rail)	DIN Rail *(see page 83)*
5	USB mini-B programming port / For terminal connection to a programming PC (SoMachine Basic)	USB mini-B programming port *(see page 328)*
6	24 Vdc power supply	Power supply *(see page 98)*
7	Ethernet port / RJ45 connector	Ethernet port *(see page 330)*
8	Serial line port 1 / RJ45 connector (RS-232 or RS-485)	Serial line 1 *(see page 333)*
9	Run/Stop switch	Run/Stop switch *(see page 60)*
10	Removable analog inputs cover	–
11	2 analog inputs	Analog Inputs *(see page 232)*
12	SD Card slot	SD Card Slot *(see page 62)*
13	I/O expansion connector	–
14	Protective cover (SD Card slot, Run/Stop switch and USB mini-B programming port)	–
15	Locking hook	–
16	Battery holder	Installing and Replacing the Battery *(see page 49)*

Status LEDs

The following figure shows the status LEDs:

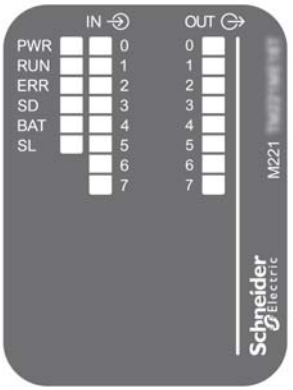

The following table describes the status LEDs:

Label	Function Type	Color	Status	Description		
				Controller States[1]	**Prg Port Communication**	**Application Execution**
PWR	Power	Green	On	Indicates that power is applied.		
			Off	Indicates that power is removed.		
RUN	Machine Status	Green	On	Indicates that the controller is running a valid application.		
			Flashing	Indicates that the controller has a valid application that is stopped.		
			Off	Indicates that the controller is not programmed		
ERR	Error	Red	On*	EXCEPTION	Restricted	NO
			Flashing (with RUN status LED Off)	INTERNAL ERROR	Restricted	NO
			Slow flash	Minor error detected	Yes	Depends on the RUN status LED
			1 single flash	No application	Yes	Yes
SD	SD Card Access *(see page 62)*	Green	On	Indicates that the SD card is being accessed		
			Flashing	Indicates that an error was detected during the SD card operation.		
			Off	Indicates no access (idle) or no card is present.		
BAT	Battery *(see page 48)*	Red	On	Indicates that the battery needs to be replaced.		
			Flashing	Indicates that the battery charge is low.		
			Off	Indicates that the battery is OK.		
SL	Serial line 1 *(see page 333)*	Green	On	Indicates the status of Serial line 1		
			Flashing	Indicates activity on Serial line 1		
			Off	Indicates no serial communication		
* ERR LED is also On during booting process **NOTE:** For information about the LEDs integrated into the Ethernet connector, refer to Ethernet Status LEDs *(see page 332)*						

[1] For more information about the controller state description, refer to the M221 Logic Controller - Programming Guide.

Dimensions

The following figure shows the external dimensions of the controllers:

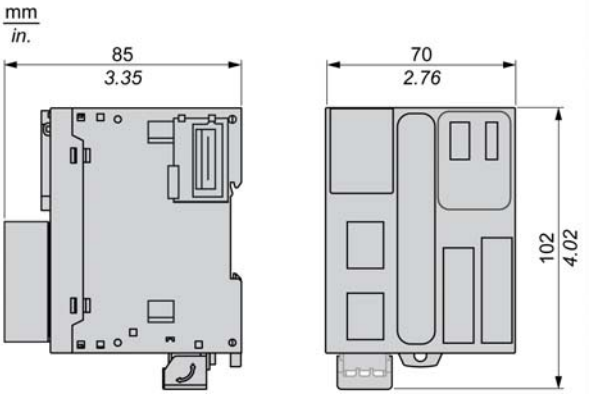

TM221ME16R / TM221ME16RG Digital Inputs

Overview

M221 Logic Controller embedded digital inputs:

- 4 regular inputs
- 4 fast inputs which can be used as 100 kHz HSC inputs

For more information on Input Management *(see page 55)*.

⚠ DANGER

FIRE HAZARD

- Use only the recommended wire sizes for the current capacity of the I/O channels and power supplies.
- For relay output (2 A) wiring, use conductors of at least 0.5 mm2 (AWG 20) with a temperature rating of at least 80 °C (176 °F).
- For common conductors of relay output wiring (7 A), or relay output wiring greater than 2 A, use conductors of at least 1.0 mm2 (AWG 16) with a temperature rating of at least 80 °C (176 °F).

Failure to follow these instructions will result in death or serious injury.

⚠ WARNING

UNINTENDED EQUIPMENT OPERATION

Do not exceed any of the rated values specified in the environmental and electrical characteristics tables.

Failure to follow these instructions can result in death, serious injury, or equipment damage.

Input Management Functions Availability

Embedded digital inputs can be configured as functions (Run/Stop, events, HSC, PWM, PLS).

Inputs not configured as functions are used as regular inputs.

The following table shows the possible usage of the controller digital inputs:

Function		Input Function				HSC/PWM/PLS
		None	Run/Stop	Latch	Event	
Fast Input[1]	I0	X	X	–	–	HSC
	I1	X	X	–	–	HSC
Regular Input	I2	X	X	X	X	–
	I3	X	X	X	X	–
	I4	X	X	X	X	–
	I5	X	X	X	X	–
Fast Input[1]	I6	X	X	–	–	HSC
	I7	X	X	–	–	HSC

X Yes
– No
1 Can also be used as a regular input

You can use filters and functions to manage the controller inputs *(see page 55)*.

Regular Input Characteristics

The following table describes the characteristics of the TM221M Logic Controller regular inputs:

Characteristic		Value
Number of regular inputs		4 inputs (I2, I3, I4, I5)
Number of channel groups		1 common line for I0...I7
Input type		Type 1 (IEC/EN 61131-2)
Logic type		Sink/Source
Input voltage range		24 Vdc
Rated input voltage		19.2...28.8 Vdc
Rated input current		7 mA
Input impedance		3.4 kΩ
Input limit values	Voltage at state 1	> 15 Vdc (15...28.8 Vdc)
	Voltage at state 0	< 5 Vdc (0...5 Vdc)
	Current at state 1	> 2.5 mA
	Current at state 0	< 1.0 mA

Characteristic		Value
Derating		No derating
Turn on time		35 µs + filter value[1]
Turn off time		35 µs + filter value[1]
Isolation	Between input and internal logic	500 Vac
Connection type	TM221ME16R	Removable screw terminal blocks
	TM221ME16RG	Removable spring terminal blocks
Connector insertion/removal durability		Over 100 times
Cable	Type	Unshielded
	Length	Maximum 30 m (98 ft)
[1] For more information, refer to Integrator Filter Principle *(see page 55)*		

Fast Input Characteristics

The following table describes the characteristics of the TM221M Logic Controller fast inputs:

Characteristic		Value
Number of fast inputs		4 inputs (I0, I1, I6, I7)
Number of channel groups		1 common line for I0...I7
Input type		Type 1 (IEC/EN 61131-2)
Logic type		Sink/Source
Rated input voltage		24 Vdc
Input voltage range		19.2...28.8 Vdc
Rated input current		4.5 mA
Input impedance		4.9 kΩ
Input limit values	Voltage at state 1	> 15 Vdc (15...28.8 Vdc)
	Voltage at state 0	< 5 Vdc (0...5 Vdc)
	Current at state 1	> 2.5 mA
	Current at state 0	< 1.0 mA
Derating		No derating
Turn on time		5 µs + filter value[1]
Turn off time		5 µs + filter value[1]
HSC maximum frequency	A/B phase	50 kHz (20 µs)
	Pulse/Direction	100 kHz
	Single phase	100 kHz

Characteristic		Value
HSC supported operation mode		● Up/Down counter ● Bi-phase counter ● Single counter ● Frequency meter
Isolation	Between input and internal logic	500 Vac
	Between channel groups	500 Vac
Connection type	TM221ME16R	Removable screw terminal block
	TM221ME16RG	Removable spring terminal block
Connector insertion/removal durability		Over 100 times
Cable	Type	Shielded, including the 24 Vdc power supply
	Length	Maximum 10 m (32.8 ft)
[1] For more information, refer to Integrator Filter Principle *(see page 55)*		

Wiring Diagram

The following figure shows the connection of the inputs to the sensors:

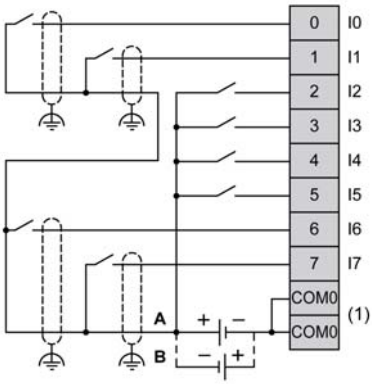

(1) The COM0 terminals are connected internally.
A Sink wiring (positive logic).
B Source wiring (negative logic).

TM221ME16R / TM221ME16RG Digital Outputs

Overview

M221 Logic Controller with 8 relay outputs embedded.

For more information on Output Management *(see page 57)*.

⚠ DANGER

FIRE HAZARD

- Use only the recommended wire sizes for the current capacity of the I/O channels and power supplies.
- For relay output (2 A) wiring, use conductors of at least 0.5 mm2 (AWG 20) with a temperature rating of at least 80 °C (176 °F).
- For common conductors of relay output wiring (7 A), or relay output wiring greater than 2 A, use conductors of at least 1.0 mm2 (AWG 16) with a temperature rating of at least 80 °C (176 °F).

Failure to follow these instructions will result in death or serious injury.

⚠ WARNING

UNINTENDED EQUIPMENT OPERATION

Do not exceed any of the rated values specified in the environmental and electrical characteristics tables.

Failure to follow these instructions can result in death, serious injury, or equipment damage.

Relay Output Characteristics

The following table describes the characteristics of the TM221M Logic Controller with relay outputs:

Characteristic	Value
Number of relay outputs	8 outputs
Number of channel groups	1 common line for Q0...Q3 1 common line for Q4...Q7
Output type	Relay
Contact type	NO (Normally Open)
Rated output voltage	24 Vdc, 240 Vac
Maximum voltage	30 Vdc, 264 Vac

Characteristic		Value
Minimum switching load		5 Vdc at 1 mA
Rated output current		2 A
Maximum output current		2 A per output
		7 A per common
Maximum output frequency with maximum load		20 operations per minute
Derating		No derating
Turn on time		Max. 10 ms
Turn off time		Max. 10 ms
Contact resistance		30 mΩ max
Mechanical life		20 million operations
Electrical life	Under resistive load	See power limitation *(see page 230)*
	Under inductive load	
Protection against short circuit		No
Isolation	Between output and internal logic	500 Vac
	Between channel groups	500 Vac
Connection type	TM221ME16R	Removable screw terminal blocks
	TM221ME16RG	Removable spring terminal blocks
Connector insertion/removal durability		Over 100 times
Cable	Type	Unshielded
	Length	Max. 30 m (98 ft)
NOTE: Refer to Protecting Outputs from Inductive Load Damage *(see page 96)* for additional information concerning output protection.		

Power Limitation

The following table describes the power limitation of the TM221ME16R / TM221ME16RG relay outputs controllers depending on the voltage, the type of load, and the number of operations required.

These controllers do not support capacitive loads.

⚠ WARNING

RELAY OUTPUTS WELDED CLOSED

- Always protect relay outputs from inductive alternating current load damage using an appropriate external protective circuit or device.
- Do not connect relay outputs to capacitive loads.

Failure to follow these instructions can result in death, serious injury, or equipment damage.

Power Limitations				
Voltage	**24 Vdc**	**120 Vac**	**240 Vac**	**Number of operations**
Power of resistive loads AC-12	–	240 VA 80 VA	480 VA 160 VA	100,000 300,000
Power of inductive loads AC-15 (cos φ = 0.35)	–	60 VA 18 VA	120 VA 36 VA	100,000 300,000
Power of inductive loads AC-14 (cos φ = 0.7)	–	120 VA 36 VA	240 VA 72 VA	100,000 300,000
Power of resistive loads DC-12	48 W 16 W	–	–	100,000 300,000
Power of inductive loads DC-13 L/R = 7 ms	24 W 7.2 W	–	–	100,000 300,000

Wiring Diagram

The following figure shows the connection of the outputs to the load:

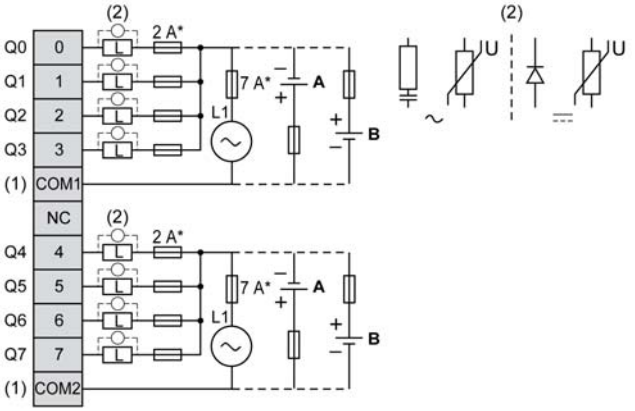

***** Type T fuse

(1) The COM1 and COM2 terminals are **not** connected internally.

(2) To improve the life time of the contacts, and to protect from potential inductive load damage, you must connect a free wheeling diode in parallel to each inductive DC load or an RC snubber in parallel of each inductive AC load

A Source wiring (positive logic).

B Sink wiring (negative logic).

NOTE: The assigned fuse values have been specified for the maximum current characteristics of the controller I/O and associated commons. You may have other considerations that are applicable based on the unique types of input and output devices you connect, or conformance to local, national or applicable certification regulations and standards, and you should size your fuses accordingly.

⚠ WARNING
UNINTENDED EQUIPMENT OPERATION Do not connect wires to unused terminals and/or terminals indicated as “No Connection (N.C.)”. **Failure to follow these instructions can result in death, serious injury, or equipment damage.**

TM221ME16R / TM221ME16RG Analog Inputs

Overview

The M221 Logic Controllers have 2 analog inputs embedded.

⚠ DANGER

FIRE HAZARD

- Use only the recommended wire sizes for the current capacity of the I/O channels and power supplies.
- For relay output (2 A) wiring, use conductors of at least 0.5 mm2 (AWG 20) with a temperature rating of at least 80 °C (176 °F).
- For common conductors of relay output wiring (7 A), or relay output wiring greater than 2 A, use conductors of at least 1.0 mm2 (AWG 16) with a temperature rating of at least 80 °C (176 °F).

Failure to follow these instructions will result in death or serious injury.

⚠ WARNING

UNINTENDED EQUIPMENT OPERATION

Do not exceed any of the rated values specified in the environmental and electrical characteristics tables.

Failure to follow these instructions can result in death, serious injury, or equipment damage.

The following procedure describes how to mount the analog cables:

Step	Action
1	Use a screw-driver to remove the protective cover. 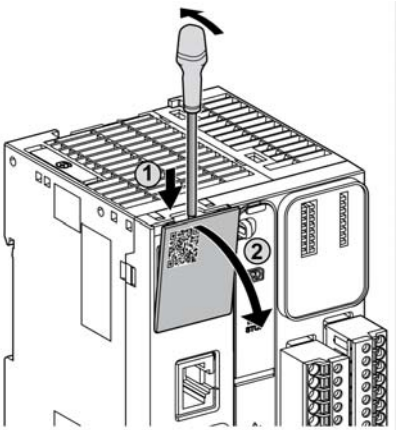
2	Push until you hear it “click”. 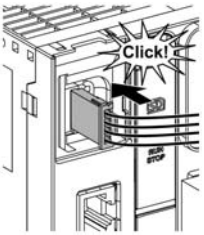
3	Replace the protective cover. 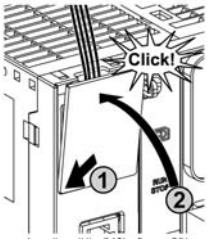

Analog Input Characteristics

The following table describes the characteristics of the M221 Logic Controller with analog inputs:

Characteristic		Voltage Input
Number of maximum inputs		2 inputs
Input type		Single-ended
Rated input range		0...+10 Vdc
Digital resolution		10 bits
Input value of LSB		10 mV
Input impedance		100 kΩ
Input delay time		12 ms
Sample duration time		1 ms per channel + 1 scan time
Accuracy		± 1 % of the full scale
Noise resistance - maximum temporary deviation during perturbations		± 5 % maximum of the full scale when EMC perturbation is applied to the power and I/O wiring
Isolation	Between input and internal logic	Not isolated
Connection type		Specific connector and cable (supplied)
Connector insertion/removal durability		Over 100 times
Cable	Type	Proprietary (supplied)
	Length	1 m (3.3 ft)

Wiring Diagram

The following figure shows the wiring diagram of the Modicon M221 Logic Controller analog inputs:

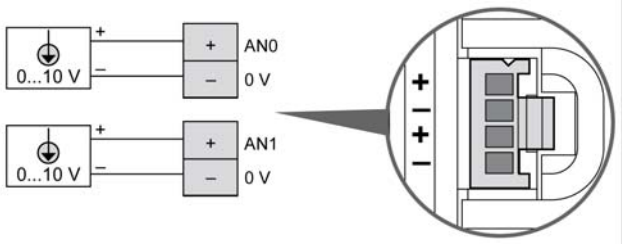

The (-) poles are connected internally.

Pin	Wire Color
AN0	Red
0 V	Black

Pin	Wire Color
AN1	Red
0 V	Black

For more information, refer to the Wiring Rules and Recommendation *(see page 92)*.

Chapter 19
TM221M16T / TM221M16TG

Overview

This chapter describes the TM221M16T / TM221M16TG controllers.

What Is in This Chapter?

This chapter contains the following topics:

Topic	Page
TM221M16T / TM221M16TG Presentation	238
TM221M16T / TM221M16TG Digital Inputs	242
TM221M16T / TM221M16TG Digital Outputs	247
TM221M16T / TM221M16TG Analog Inputs	252

TM221M16T / TM221M16TG Presentation

Overview

The following features are integrated into the TM221M16T (screw) and TM221M16TG (spring) controllers:

- 8 digital inputs
  - 4 regular inputs
  - 4 fast inputs (HSC)
- 8 digital outputs
  - 6 regular transistor outputs
  - 2 fast transistor outputs
- 2 analog inputs
- Communication port
  - 2 serial line ports
  - 1 USB mini-B programming port

Description

The following figure shows the different components of the controllers:

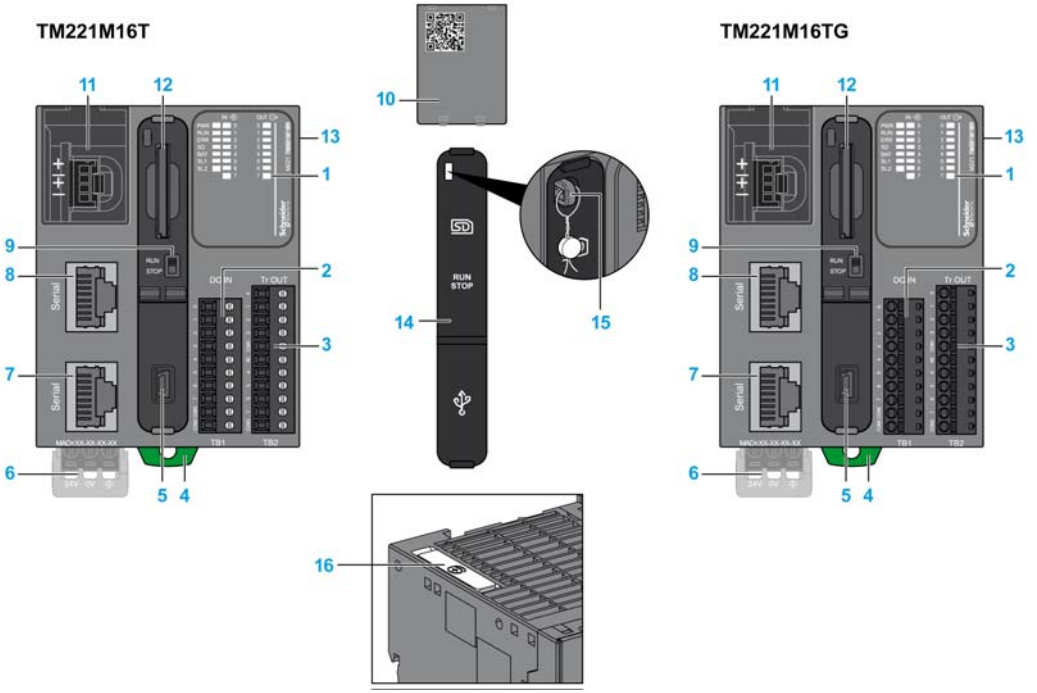

N°	Description	Refer to
1	Status LEDs	–
2	Input removable terminal block	Rules for Removable Screw Terminal Block *(see page 93)* Rules for Removable Spring Terminal Block *(see page 94)*
3	Output removable terminal block	
4	Clip-on lock for 35 mm (1.38 in.) top hat section rail (DIN-rail)	DIN Rail *(see page 83)*
5	USB mini-B programming port / For terminal connection to a programming PC (SoMachine Basic)	USB mini-B programming port *(see page 328)*
6	24 Vdc power supply	Power supply *(see page 98)*
7	Serial line port 2 / RJ45 connector (RS-485)	Serial line 2 *(see page 337)*
8	Serial line port 1 / RJ45 connector (RS-232 or RS-485)	Serial line 1 *(see page 333)*
9	Run/Stop switch	Run/Stop switch *(see page 60)*
10	Removable analog inputs cover	–
11	2 analog inputs	Analog Inputs *(see page 252)*
12	SD Card slot	SD Card Slot *(see page 62)*
13	I/O expansion connector	–
14	Protective cover (SD Card slot, Run/Stop switch and USB mini-B programming port)	–
15	Locking hook	–
16	Battery holder	Installing and Replacing the Battery *(see page 49)*

Status LEDs

The following figure shows the status LEDs:

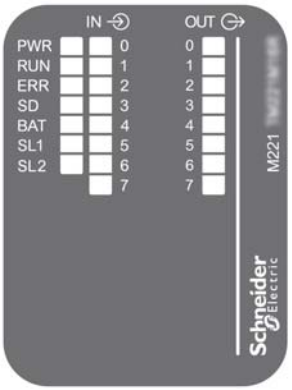

The following table describes the status LEDs:

Label	Function Type	Color	Status	Description		
				Controller States[1]	**Prg Port Communication**	**Application Execution**
PWR	Power	Green	On	Indicates that power is applied.		
			Off	Indicates that power is removed.		
RUN	Machine Status	Green	On	Indicates that the controller is running a valid application.		
			Flashing	Indicates that the controller has a valid application that is stopped.		
			Off	Indicates that the controller is not programmed		
ERR	Error	Red	On*	EXCEPTION	Restricted	NO
			Flashing (with RUN status LED Off)	INTERNAL ERROR	Restricted	NO
			Slow flashing	Minor error detected	Yes	Depends on the RUN status LED
			1 single flash	No application	Yes	Yes
SD	SD Card Access *(see page 62)*	Green	On	Indicates that the SD card is being accessed		
			Flashing	Indicates that an error was detected during the SD card operation.		
			Off	Indicates no access (idle) or no card is present.		
BAT	Battery *(see page 48)*	Red	On	Indicates that the battery needs to be replaced.		
			Flashing	Indicates that the battery charge is low.		
			Off	Indicates that the battery is OK.		
SL1	Serial line 1 *(see page 333)*	Green	On	Indicates the status of Serial line 1		
			Flashing	Indicates activity on Serial line 1		
			Off	Indicates no serial communication		
SL2	Serial line 2 *(see page 337)*	Green	On	Indicates the status of Serial line 2		
			Flashing	Indicates activity on Serial line 2		
			Off	Indicates no serial communication		
* ERR LED is also On during booting process						

[1] For more information about the controller state description, refer to the M221 Logic Controller - Programming Guide.

Dimensions

The following figure shows the external dimensions of the controllers:

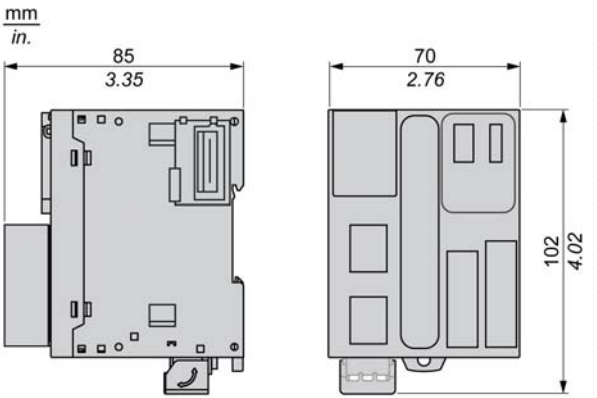

TM221M16T / TM221M16TG Digital Inputs

Overview

M221 Logic Controller has 8 digital inputs embedded:

- 4 regular inputs
- 4 fast inputs which can be used as 100 kHz HSC inputs

For more information, refer to Input Management *(see page 55)*.

DANGER

FIRE HAZARD

- Use only the recommended wire sizes for the current capacity of the I/O channels and power supplies.
- For relay output (2 A) wiring, use conductors of at least 0.5 mm2 (AWG 20) with a temperature rating of at least 80 °C (176 °F).
- For common conductors of relay output wiring (7 A), or relay output wiring greater than 2 A, use conductors of at least 1.0 mm2 (AWG 16) with a temperature rating of at least 80 °C (176 °F).

Failure to follow these instructions will result in death or serious injury.

WARNING

UNINTENDED EQUIPMENT OPERATION

Do not exceed any of the rated values specified in the environmental and electrical characteristics tables.

Failure to follow these instructions can result in death, serious injury, or equipment damage.

Input Management Functions Availability

Embedded digital inputs can be configured as functions (Run/Stop, events, HSC, PWM, PLS).

Inputs not configured as functions are used as regular inputs.

The following table shows the possible usage of the controller digital inputs:

Function		Input Function				HSC/PWM/PLS
		None	Run/Stop	Latch	Event	
Fast Input[1]	I0	X	X	–	–	HSC
	I1	X	X	–	–	HSC
Regular Input	I2	X	X	X	X	–
	I3	X	X	X	X	–
	I4	X	X	X	X	–
	I5	X	X	X	X	–
Fast Input[1]	I6	X	X	–	–	HSC
	I7	X	X	–	–	HSC

X Yes
– No
1 Can also be used as a regular input

You can use filters and functions to manage the controller inputs *(see page 55)*.

Regular Input Characteristics

The following table describes the characteristics of the TM221M Logic Controller regular inputs:

Characteristic		Value
Number of regular inputs		4 inputs (I2, I3, I4, I5)
Number of channel groups		1 common line for I0...I7
Input type		Type 1 (IEC/EN 61131-2)
Logic type		Sink/Source
Input voltage range		24 Vdc
Rated input voltage		19.2...28.8 Vdc
Rated input current		7 mA
Input impedance		3.4 kΩ
Input limit values	Voltage at state 1	> 15 Vdc (15...28.8 Vdc)
	Voltage at state 0	< 5 Vdc (0...5 Vdc)
	Current at state 1	> 2.5 mA
	Current at state 0	< 1.0 mA

Characteristic		Value
Derating		see Derating Curve *(see page 245)*
Turn on time		35 µs + filter value[1]
Turn off time		35 µs + filter value[1]
Isolation	Between input and internal logic	500 Vac
Connection type	TM221M16T	Removable screw terminal blocks
	TM221M16TG	Removable spring terminal blocks
Connector insertion/removal durability		Over 100 times
Cable	Type	Unshielded
	Length	Maximum 30 m (98 ft)
[1] For more information, refer to Integrator Filter Principle *(see page 55)*		

Fast Input Characteristics

The following table describes the characteristics of the TM221M Logic Controller fast inputs:

Characteristic		Value
Number of fast inputs		4 inputs (I0, I1, I6, I7)
Number of channel groups		1 common line for I0...I7
Input type		Type 1 (IEC/EN 61131-2)
Logic type		Sink/Source
Rated input voltage		24 Vdc
Input voltage range		19.2...28.8 Vdc
Rated input current		4.5 mA
Input impedance		4.9 kΩ
Input limit values	Voltage at state 1	> 15 Vdc (15...28.8 Vdc)
	Voltage at state 0	< 5 Vdc (0...5 Vdc)
	Current at state 1	2.6 mA
	Current at state 0	< 1.0 mA
Derating		see Derating Curve *(see page 245)*
Turn on time		5 µs + filter value[1]
Turn off time		5 µs + filter value[1]
HSC maximum frequency	A/B phase	50 kHz (20 µs)
	Pulse/Direction	100 kHz
	Single phase	100 kHz

Characteristic		Value
HSC supported operation mode		• Up/Down counter • Bi-phase counter • Single counter • Frequency meter
Isolation	Between input and internal logic	500 Vac
	Between channel groups	500 Vac
Connection type	TM221M16T	Removable screw terminal block
	TM221M16TG	Removable spring terminal block
Connector insertion/removal durability		Over 100 times
Cable	Type	Shielded, including the 24 Vdc power supply
	Length	Maximum 10 m (32.8 ft)
[1] For more information, refer to Integrator Filter Principle *(see page 55)*		

Derating Curves

The following figures show the derating curves of the embedded digital inputs:

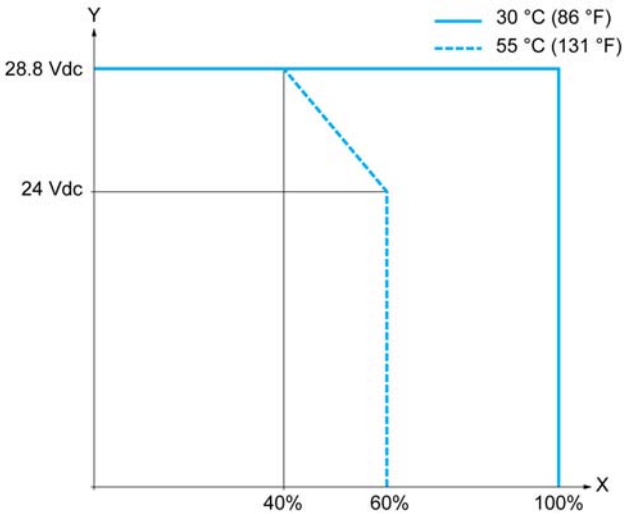

X Input simultaneous ON ratio
Y Input voltage

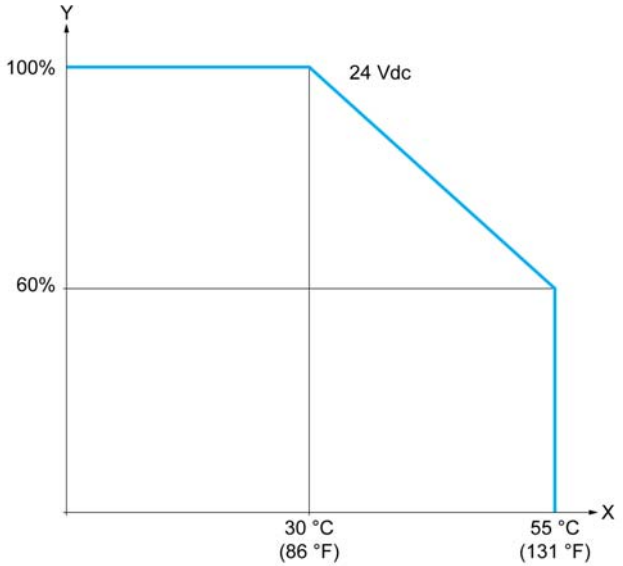

X Ambient temperature
Y Input simultaneous ON ratio

Wiring Diagram

The following figure shows the connection of the inputs to the sensors:

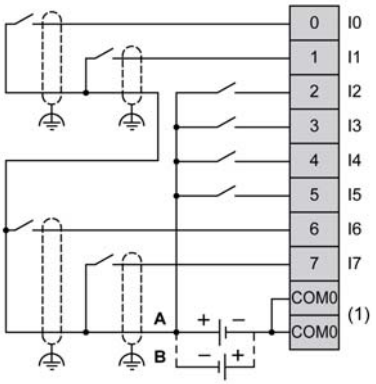

(1) The COM0 terminals are connected internally.
A Sink wiring (positive logic).
B Source wiring (negative logic).

TM221M16T / TM221M16TG Digital Outputs

Overview

The TM221M16T and TM221M16TG have digital outputs embedded:

- 6 regular transistor outputs
- 2 fast transistor outputs

For more information, refer to Output Management *(see page 57)*.

⚠ DANGER

FIRE HAZARD

- Use only the recommended wire sizes for the current capacity of the I/O channels and power supplies.
- For relay output (2 A) wiring, use conductors of at least 0.5 mm2 (AWG 20) with a temperature rating of at least 80 °C (176 °F).
- For common conductors of relay output wiring (7 A), or relay output wiring greater than 2 A, use conductors of at least 1.0 mm2 (AWG 16) with a temperature rating of at least 80 °C (176 °F).

Failure to follow these instructions will result in death or serious injury.

⚠ WARNING

UNINTENDED EQUIPMENT OPERATION

Do not exceed any of the rated values specified in the environmental and electrical characteristics tables.

Failure to follow these instructions can result in death, serious injury, or equipment damage.

Regular Transistor Output Characteristics

The following table describes the characteristics of the TM221M Logic Controller regular transistor outputs:

Characteristic	Value
Number of regular outputs	6 outputs (Q2...Q7)
Number of channel groups	1 common line for Q0...Q7
Output type	Transistor
Logic type	Source
Rated output voltage	24 Vdc

Characteristic		Value
Output voltage range		19.2...28.8 Vdc
Rated output current		0.5 A
Total output current		4 A
Voltage drop		1 Vdc max
Leakage current when switched off		0.1 mA
Maximum power of filament lamp		12 W max
Derating		see Derating Curve *(see page 250)*
Turn on time	Q2...Q3	Max. 50 µs
	Q4...Q7	Max. 300 µs
Turn off time	Q2...Q3	Max. 50 µs
	Q4...Q7	Max. 300 µs
Protection against short circuit		Yes
Short circuit output peak current		1.3 A
Automatic rearming after short circuit or overload		Yes, every 1 s
Clamping voltage		Max. 39 Vdc ± 1 Vdc
Switching frequency	Under resistive load	100 Hz max.
Isolation	Between output and internal logic	500 Vac
Connection type	TM221M16T	Removable screw terminal blocks
	TM221M16TG	Removable spring terminal blocks
Connector insertion/removal durability		Over 100 times
Cable	Type	Unshielded
	Length	Max 30 m (98 ft)
NOTE: Refer to Protecting Outputs from Inductive Load Damage *(see page 96)* for additional information concerning output protection.		

Fast Transistor Output Characteristics

The following table describes the characteristics of the TM221M Logic Controller fast transistor outputs:

Characteristic	Value
Number of fast outputs	2 outputs (Q0, Q1)
Number of channel groups	1 common line for Q0...Q7
Output type	Transistor
Logic type	Source
Rated output voltage	24 Vdc

Characteristic		Value
Output voltage range		19.2...28.8 Vdc
Rated output current		0.5 A
Total output current		4 A
Maximum power of filament lamp		2.4 W max
Derating		see Derating Curve *(see page 250)*
Turn on time		Max. 5 µs
Turn off time		Max. 5 µs
Protection against short circuit		Yes
Short circuit output peak current		1.3 A max.
Automatic rearming after short circuit or overload		Yes, every 1 s
Protection against reverse polarity		Yes
Clamping voltage		Typ. 39 Vdc +/- 1 Vdc
Maximum output frequency	PWM/PLS	100 kHz
Isolation	Between output and internal logic	500 Vac
Connection type	TM221M16T	Removable screw terminal blocks
	TM221M16TG	Removable spring terminal blocks
Connector insertion/removal durability		Over 100 times
Cable	Type	Shielded, including 24 Vdc power supply
	Length	Maximum 3 m (9.84 ft)
NOTE: Refer to Protecting Outputs from Inductive Load Damage *(see page 96)* for additional information concerning output protection.		

Derating Curves

The following figures show the derating curves of the embedded digital outputs:

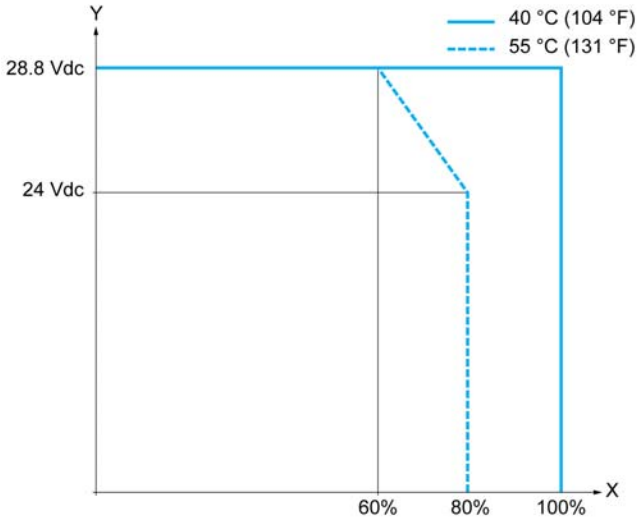

X Output simultaneous ON ratio
Y Output voltage

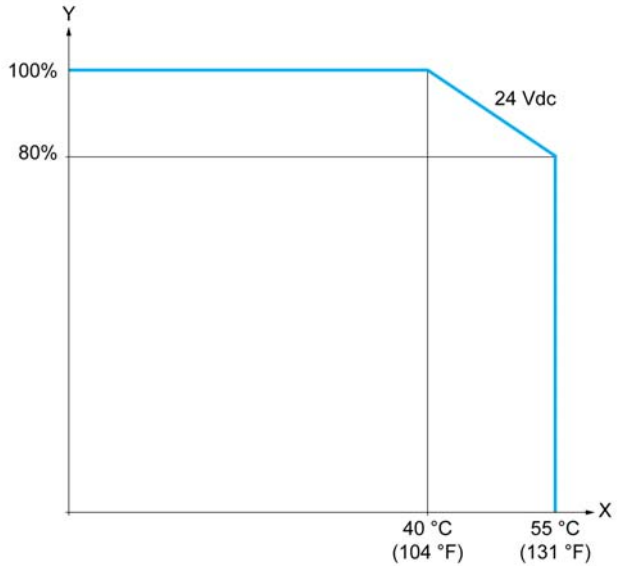

X Ambient temperature
Y Output simultaneous ON ratio

Wiring Diagram

The following figure shows the connection of the outputs to the load:

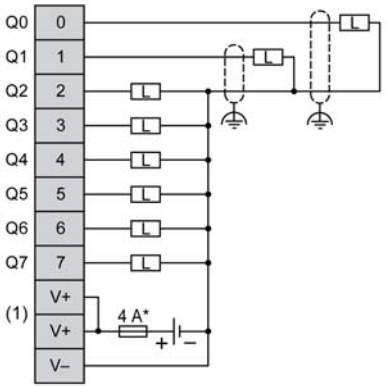

***** Type T fuse

(1) The V+ terminals are connected internally.

TM221M16T / TM221M16TG Analog Inputs

Overview

The M221 Logic Controllers have 2 analog inputs embedded.

⚠ DANGER

FIRE HAZARD

- Use only the recommended wire sizes for the current capacity of the I/O channels and power supplies.
- For relay output (2 A) wiring, use conductors of at least 0.5 mm2 (AWG 20) with a temperature rating of at least 80 °C (176 °F).
- For common conductors of relay output wiring (7 A), or relay output wiring greater than 2 A, use conductors of at least 1.0 mm2 (AWG 16) with a temperature rating of at least 80 °C (176 °F).

Failure to follow these instructions will result in death or serious injury.

⚠ WARNING

UNINTENDED EQUIPMENT OPERATION

Do not exceed any of the rated values specified in the environmental and electrical characteristics tables.

Failure to follow these instructions can result in death, serious injury, or equipment damage.

The following procedure describes how to mount the analog cables:

Step	Action
1	Use a screw-driver to remove the protective cover. 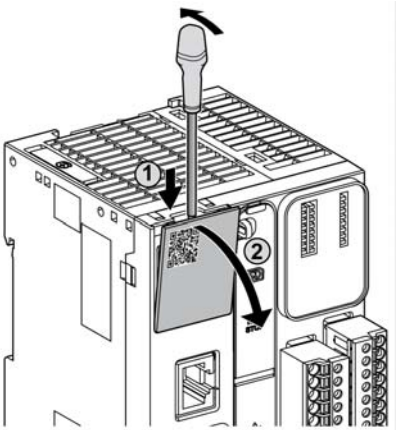
2	Push until you hear it “click”. 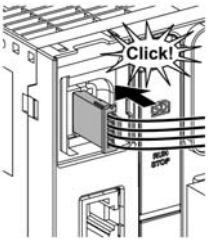
3	Replace the protective cover. 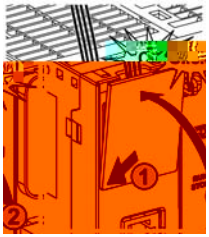

Analog Input Characteristics

The following table describes the characteristics of the M221 Logic Controller with analog inputs:

Characteristic		Voltage Input
Number of maximum inputs		2 inputs
Input type		Single-ended
Rated input range		0...+10 Vdc
Digital resolution		10 bits
Input value of LSB		10 mV
Input impedance		100 kΩ
Input delay time		12 ms
Sample duration time		1 ms per channel + 1 scan time
Accuracy		± 1 % of the full scale
Noise resistance - maximum temporary deviation during perturbations		± 5 % maximum of the full scale when EMC perturbation is applied to the power and I/O wiring
Isolation	Between input and internal logic	Not isolated
Connection type		Specific connector and cable (supplied)
Connector insertion/removal durability		Over 100 times
Cable	Type	Proprietary (supplied)
	Length	1 m (3.3 ft)

Wiring Diagram

The following figure shows the wiring diagram of the Modicon M221 Logic Controller analog inputs:

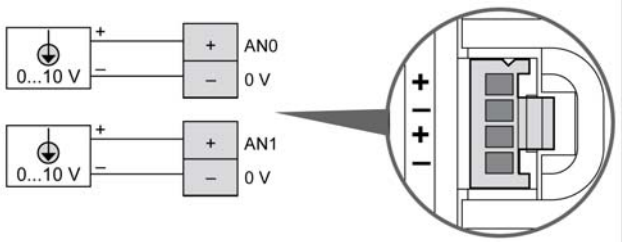

The (-) poles are connected internally.

Pin	Wire Color
AN0	Red
0 V	Black

Pin	Wire Color
AN1	Red
0 V	Black

For more information, refer to the Wiring Rules and Recommendation *(see page 92)*.

Chapter 20
TM221ME16T / TM221ME16TG

Overview

This chapter describes the TM221ME16T / TM221ME16TG controllers.

What Is in This Chapter?

This chapter contains the following topics:

Topic	Page
TM221ME16T / TM221ME16TG Presentation	258
TM221ME16T / TM221ME16TG Digital Inputs	263
TM221ME16T / TM221ME16TG Digital Outputs	268
TM221ME16T / TM221ME16TG Analog Inputs	273

TM221ME16T / TM221ME16TG Presentation

Overview

The following features are integrated into the TM221ME16T (screw) and TM221ME16TG (spring) controllers:

- 8 digital inputs
  - 4 regular inputs
  - 4 fast inputs (HSC)
- 8 digital outputs
  - 6 regular transistor outputs
  - 2 fast transistor outputs
- 2 analog inputs
- Communication port
  - 1 serial line port
  - 1 USB mini-B programming port
  - 1 Ethernet port

Description

The following figure shows the different components of the controllers:

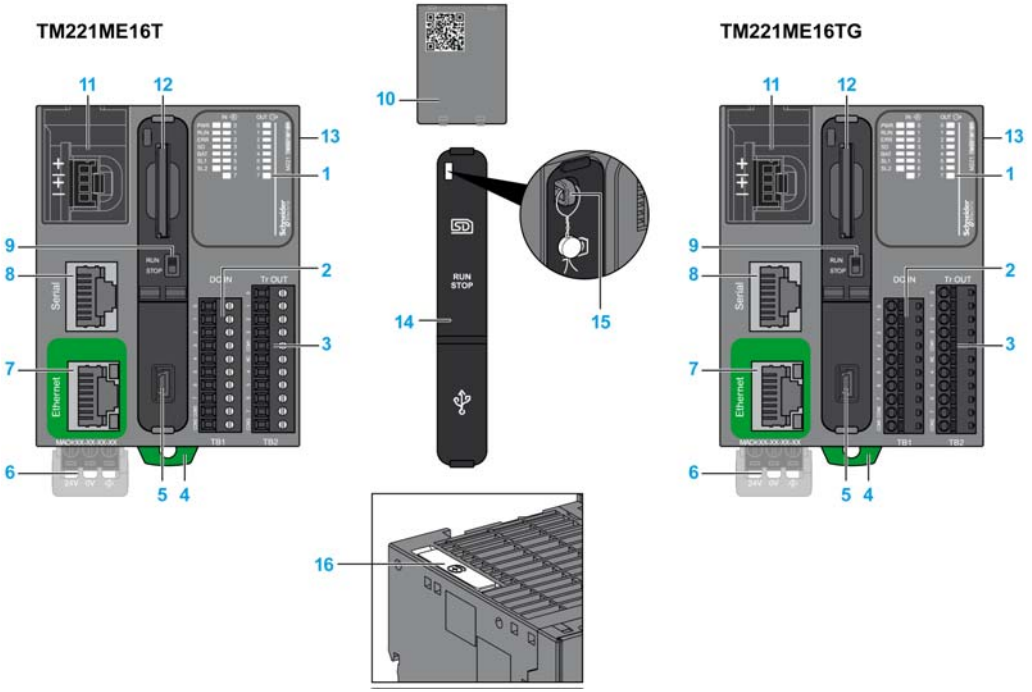

N°	Description	Refer to
1	Status LEDs	–
2	Input removable terminal block	Rules for Removable Screw Terminal Block *(see page 93)* Rules for Removable Spring Terminal Block *(see page 94)*
3	Output removable terminal block	
4	Clip-on lock for 35 mm (1.38 in.) top hat section rail (DIN-rail)	DIN Rail *(see page 83)*
5	USB mini-B programming port / For terminal connection to a programming PC (SoMachine Basic)	USB mini-B programming port *(see page 328)*
6	24 Vdc power supply	Power supply *(see page 98)*
7	Ethernet port / RJ45 connector	Ethernet port *(see page 330)*
8	Serial line port 1 / RJ45 connector (RS-232 or RS-485)	Serial line 1 *(see page 333)*
9	Run/Stop switch	Run/Stop switch *(see page 60)*
10	Removable analog inputs cover	–

N°	Description	Refer to
11	2 analog inputs	Analog Inputs *(see page 273)*
12	SD Card slot	SD Card Slot *(see page 62)*
13	I/O expansion connector	–
14	Protective cover (SD Card slot, Run/Stop switch and USB mini-B programming port)	–
15	Locking hook	–
16	Battery holder	Installing and Replacing the Battery *(see page 49)*

Status LEDs

The following figure shows the status LEDs:

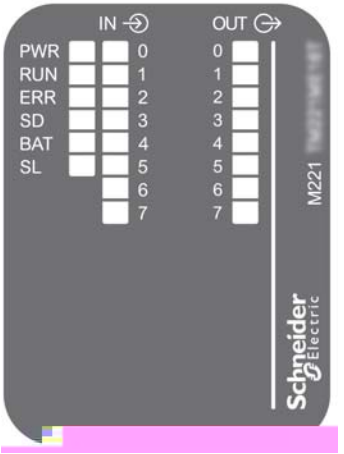

The following table describes the status LEDs:

Label	Function Type	Color	Status	Description		
				Controller States[1]	Prg Port Communication	Application Execution
PWR	Power	Green	On	Indicates that power is applied.		
			Off	Indicates that power is removed.		
* ERR LED is also On during booting process **NOTE:** For information about the LEDs integrated into the Ethernet connector, refer to Ethernet Status LEDs *(see page 332)*						

Label	Function Type	Color	Status	Description		
				Controller States[1]	**Prg Port Communication**	**Application Execution**
RUN	Machine Status	Green	On	Indicates that the controller is running a valid application.		
			Flashing	Indicates that the controller has a valid application that is stopped.		
			Off	Indicates that the controller is not programmed		
ERR	Error	Red	On*	EXCEPTION	Restricted	NO
			Flashing (with RUN status LED Off)	INTERNAL ERROR	Restricted	NO
			Slow flash	Minor error detected	Yes	Depends on the RUN status LED
			1 single flash	No application	Yes	Yes
SD	SD Card Access *(see page 62)*	Green	On	Indicates that the SD card is being accessed		
			Flashing	Indicates that an error was detected during the SD card operation.		
			Off	Indicates no access (idle) or no card is present.		
BAT	Battery *(see page 48)*	Red	On	Indicates that the battery needs to be replaced.		
			Flashing	Indicates that the battery charge is low.		
			Off	Indicates that the battery is OK.		
SL	Serial line 1 *(see page 333)*	Green	On	Indicates the status of Serial line 1		
			Flashing	Indicates activity on Serial line 1		
			Off	Indicates no serial communication		
* ERR LED is also On during booting process **NOTE:** For information about the LEDs integrated into the Ethernet connector, refer to Ethernet Status LEDs *(see page 332)*						

[1] For more information about the controller state description, refer to the M221 Logic Controller - Programming Guide.

TM221ME16T / TM221ME16TG Digital Inputs

Overview

M221 Logic Controller has 8 digital inputs embedded:

- 4 regular inputs
- 4 fast inputs which can be used as 100 kHz HSC inputs

For more information, refer to Input Management *(see page 55)*.

⚠ DANGER

FIRE HAZARD

- Use only the recommended wire sizes for the current capacity of the I/O channels and power supplies.
- For relay output (2 A) wiring, use conductors of at least 0.5 mm2 (AWG 20) with a temperature rating of at least 80 °C (176 °F).
- For common conductors of relay output wiring (7 A), or relay output wiring greater than 2 A, use conductors of at least 1.0 mm2 (AWG 16) with a temperature rating of at least 80 °C (176 °F).

Failure to follow these instructions will result in death or serious injury.

⚠ WARNING

UNINTENDED EQUIPMENT OPERATION

Do not exceed any of the rated values specified in the environmental and electrical characteristics tables.

Failure to follow these instructions can result in death, serious injury, or equipment damage.

Input Management Functions Availability

Embedded digital inputs can be configured as functions (Run/Stop, events, HSC, PWM, PLS).

Inputs not configured as functions are used as regular inputs.

The following table shows the possible usage of the controller digital inputs:

Function		Input Function				HSC/PWM/PLS
		None	Run/Stop	Latch	Event	
Fast Input[1]	I0	X	X	–	–	HSC
	I1	X	X	–	–	HSC
Regular Input	I2	X	X	X	X	–
	I3	X	X	X	X	–
	I4	X	X	X	X	–
	I5	X	X	X	X	–
Fast Input[1]	I6	X	X	–	–	HSC
	I7	X	X	–	–	HSC

X Yes
– No
1 Can also be used as a regular input

You can use filters and functions to manage the controller inputs *(see page 55)*.

Regular Input Characteristics

The following table describes the characteristics of the TM221M Logic Controller with transistor regular inputs:

Characteristic		Value
Number of regular inputs		4 inputs (I2, I3, I4, I5)
Number of channel groups		1 common line for I0....I7
Input type		Type 1 (IEC/EN 61131-2)
Logic type		Sink/Source
Rated input voltage		24 Vdc
Input voltage range		19.2...28.8 Vdc
Rated input current		7 mA
Input impedance		3.4 kΩ
Input limit values	Voltage at state 1	> 15 Vdc (15...28.8 Vdc)
	Voltage at state 0	< 5 Vdc (0...5 Vdc)
	Current at state 1	> 2.5 mA
	Current at state 0	< 1.0 mA

Characteristic		Value
Derating		see Derating Curve *(see page 266)*
Turn on time		35 µs + filter value[1]
Turn off time		35 µs + filter value[1]
Isolation	Between input and internal logic	500 Vac
Connection type	TM221ME16T	Removable screw terminal blocks
	TM221ME16TG	Removable spring terminal blocks
Connector insertion/removal durability		Over 100 times
Cable	Type	Unshielded
	Length	Maximum 30 m (98 ft)
[1] For more information, refer to Integrator Filter Principle *(see page 55)*		

Fast Input Characteristics

The following table describes the characteristics of the TM221M Logic Controller fast inputs:

Characteristic		Value
Number of fast inputs		4 inputs (I0, I1, I6, I7)
Number of channel groups		1 common line for I0...I7
Input type		Type 1 (IEC/EN 61131-2)
Logic type		Sink/Source
Rated input voltage		24 Vdc
Input voltage range		19.2...28.8 Vdc
Rated input current		4.5 mA
Input impedance		4.9 kΩ
Input limit values	Voltage at state 1	> 15 Vdc (15...28.8 Vdc)
	Voltage at state 0	< 5 Vdc (0...5 Vdc)
	Current at state 1	> 2.5 mA
	Current at state 0	< 1.0 mA
Derating		see Derating Curve *(see page 266)*
Turn on time		5 µs + filter value[1]
Turn off time		5 µs + filter value[1]
HSC maximum frequency	A/B phase	50 kHz (20 µs)
	Pulse/Direction	100 kHz
	Single phase	100 kHz

Characteristic		Value
HSC supported operation mode		• Up/Down counter • Bi-phase counter • Single counter • Frequency meter
Isolation	Between input and internal logic	500 Vac
	Between channel groups	500 Vac
Connection type	TM221ME16T	Removable screw terminal block
	TM221ME16TG	Removable spring terminal block
Connector insertion/removal durability		Over 100 times
Cable	Type	Shielded, including the 24 Vdc power supply
	Length	Maximum 10 m (32.8 ft)
[1] For more information, refer to Integrator Filter Principle *(see page 55)*		

Derating Curves

The following figures show the derating curves of the embedded digital inputs:

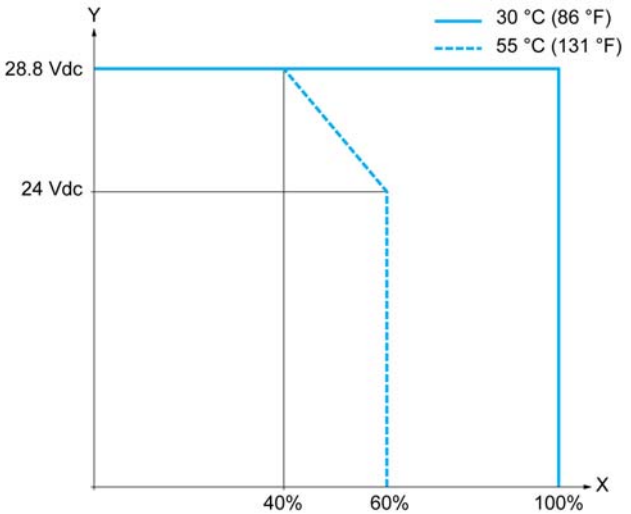

X Input simultaneous ON ratio
Y Input voltage

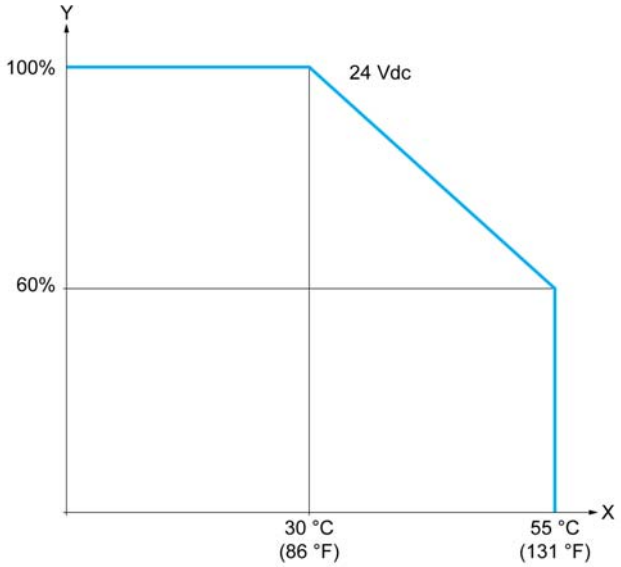

X Ambient temperature
Y Input simultaneous ON ratio

Wiring Diagram

The following figure shows the connection of the inputs to the sensors:

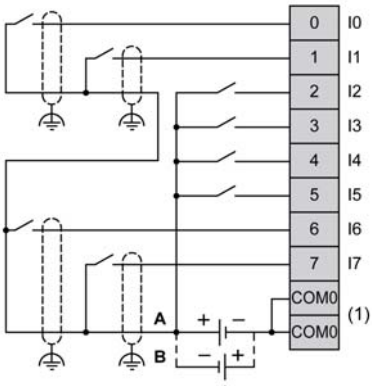

(1) The COM0 terminals are connected internally.
A Sink wiring (positive logic).
B Source wiring (negative logic).

TM221ME16T / TM221ME16TG Digital Outputs

Overview

The TM221ME16T and TM221ME16TG have 8 digital outputs embedded:

- 6 regular transistor outputs
- 2 fast transistor outputs

For more information, refer to Output Management *(see page 57)*.

⚠ DANGER

FIRE HAZARD

- Use only the recommended wire sizes for the current capacity of the I/O channels and power supplies.
- For relay output (2 A) wiring, use conductors of at least 0.5 mm2 (AWG 20) with a temperature rating of at least 80 °C (176 °F).
- For common conductors of relay output wiring (7 A), or relay output wiring greater than 2 A, use conductors of at least 1.0 mm2 (AWG 16) with a temperature rating of at least 80 °C (176 °F).

Failure to follow these instructions will result in death or serious injury.

⚠ WARNING

UNINTENDED EQUIPMENT OPERATION

Do not exceed any of the rated values specified in the environmental and electrical characteristics tables.

Failure to follow these instructions can result in death, serious injury, or equipment damage.

Regular Transistor Output Characteristics

The following table describes the characteristics of the TM221M Logic Controller regular transistor outputs:

Characteristic	Value
Number of regular outputs	6 outputs
Number of channel groups	1 common line for Q0...Q7
Output type	Transistor
Logic type	Source
Rated output voltage	24 Vdc

Characteristic		Value
Output voltage range		19.2...28.8 Vdc
Rated output current		0.5 A
Total output current		3 A
Voltage drop		1 Vdc max
Leakage current when switched off		0.1 mA
Maximum power of filament lamp		2.4 W max
Derating		see Derating Curve *(see page 271)*
Turn on time	Q2...Q3	Max. 50 µs
	Q4...Q7	Max. 300 µs
Turn off time	Q2...Q3	Max. 50 µs
	Q4...Q7	Max. 300 µs
Protection against short circuit		Yes
Short circuit output peak current		1.3 A
Automatic rearming after short circuit or overload		Yes, every 1 s
Clamping voltage		Max. 39 Vdc ± 1 Vdc
Switching frequency	Under resistive load	100 Hz max.
Isolation	Between output and internal logic	500 Vac
Connection type	TM221ME16T	Removable screw terminal blocks
	TM221ME16TG	Removable spring terminal blocks
Connector insertion/removal durability		Over 100 times
Cable	Type	Unshielded
	Length	Max 30 m (98 ft)
NOTE: Refer to Protecting Outputs from Inductive Load Damage *(see page 96)* for additional information concerning output protection.		

Fast Transistor Output Characteristics

The following table describes the characteristics of the TM221M Logic Controller fast transistor outputs:

Characteristic	Value
Number of fast outputs	2 outputs (Q0, Q1)
Number of channel groups	1 common line for Q0...Q7
Output type	Transistor
Logic type	Source
Rated output voltage	24 Vdc

Characteristic		Value
Output voltage range		19.2...28.8 Vdc
Rated output current		0.5 A
Total output current		4 A
Maximum power of filament lamp		2.4 W max
Derating		see Derating Curve *(see page 271)*
Turn on time		Max. 5 µs
Turn off time		Max. 5 µs
Protection against short circuit		Yes
Short circuit output peak current		1.3 A max.
Automatic rearming after short circuit or overload		Yes, every 1 s
Protection against reverse polarity		Yes
Clamping voltage		Typ. 39 Vdc +/- 1 Vdc
Maximum output frequency	PWM/PLS	100 kHz
Isolation	Between output and internal logic	500 Vac
Connection type	TM221ME16T	Removable screw terminal blocks
	TM221ME16TG	Removable spring terminal blocks
Connector insertion/removal durability		Over 100 times
Cable	Type	Shielded, including 24 Vdc power supply
	Length	Maximum 3 m (9.84 ft)
NOTE: Refer to Protecting Outputs from Inductive Load Damage *(see page 96)* for additional information concerning output protection.		

Derating Curves

The following figures show the derating curves of the embedded digital outputs:

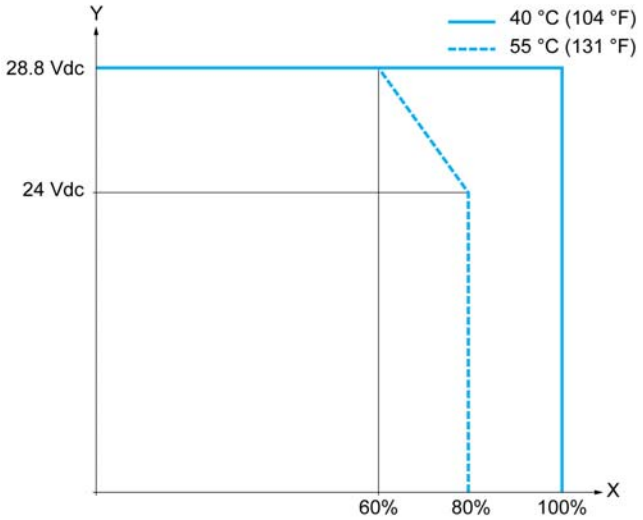

X Output simultaneous ON ratio
Y Output voltage

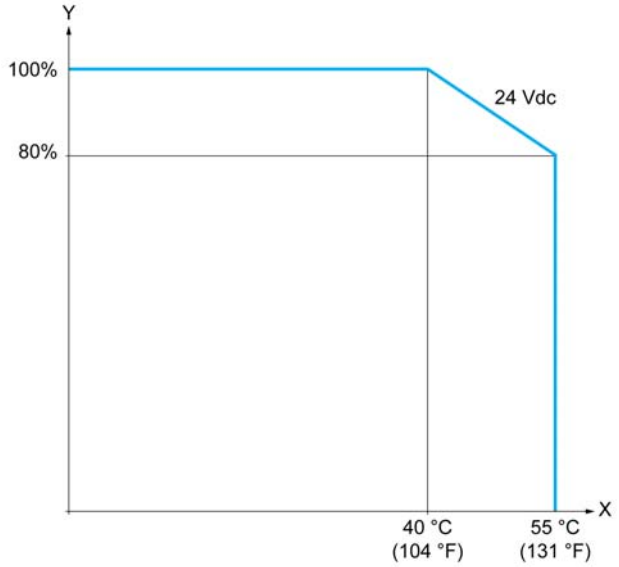

X Ambient temperature
Y Output simultaneous ON ratio

Wiring Diagram

The following figure shows the connection of the outputs to the load:

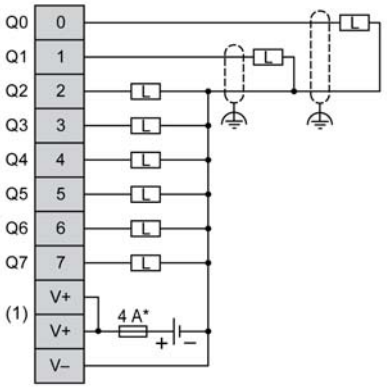

***** Type T fuse

(1) The V+ terminals are connected internally.

TM221ME16T / TM221ME16TG Analog Inputs

Overview

The M221 Logic Controllers have 2 analog inputs embedded.

⚠ DANGER

FIRE HAZARD

- Use only the recommended wire sizes for the current capacity of the I/O channels and power supplies.
- For relay output (2 A) wiring, use conductors of at least 0.5 mm2 (AWG 20) with a temperature rating of at least 80 °C (176 °F).
- For common conductors of relay output wiring (7 A), or relay output wiring greater than 2 A, use conductors of at least 1.0 mm2 (AWG 16) with a temperature rating of at least 80 °C (176 °F).

Failure to follow these instructions will result in death or serious injury.

⚠ WARNING

UNINTENDED EQUIPMENT OPERATION

Do not exceed any of the rated values specified in the environmental and electrical characteristics tables.

Failure to follow these instructions can result in death, serious injury, or equipment damage.

The following procedure describes how to mount the analog cables:

Step	Action
1	Use a screw-driver to remove the protective cover. 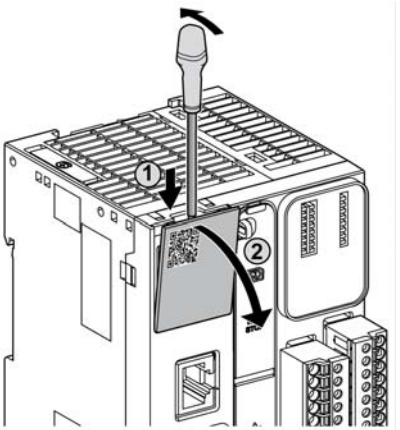
2	Push until you hear it “click”. 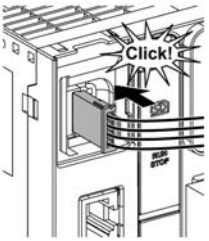
3	Replace the protective cover. 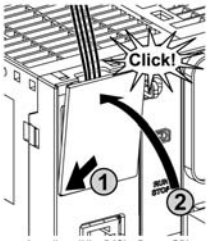

Analog Input Characteristics

The following table describes the characteristics of the M221 Logic Controller with analog inputs:

Characteristic		Voltage Input
Number of maximum inputs		2 inputs
Input type		Single-ended
Rated input range		0...+10 Vdc
Digital resolution		10 bits
Input value of LSB		10 mV
Input impedance		100 kΩ
Input delay time		12 ms
Sample duration time		1 ms per channel + 1 scan time
Accuracy		± 1 % of the full scale
Noise resistance - maximum temporary deviation during perturbations		± 5 % maximum of the full scale when EMC perturbation is applied to the power and I/O wiring
Isolation	Between input and internal logic	Not isolated
Connection type		Specific connector and cable (supplied)
Connector insertion/removal durability		Over 100 times
Cable	Type	Proprietary (supplied)
	Length	1 m (3.3 ft)

Wiring Diagram

The following figure shows the wiring diagram of the Modicon M221 Logic Controller analog inputs:

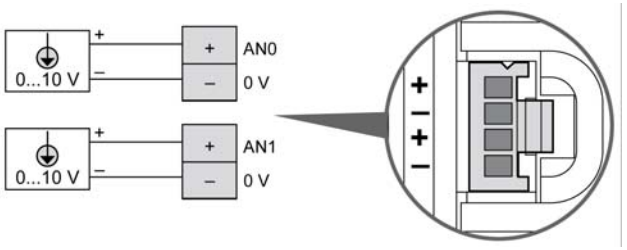

The (-) poles are connected internally.

Pin	Wire Color
AN0	Red
0 V	Black

Pin	Wire Color
AN1	Red
0 V	Black

For more information, refer to the Wiring Rules and Recommendation *(see page 92)*.

Chapter 21
TM221M32TK

Overview

This chapter describes the TM221M32TK controllers.

What Is in This Chapter?

This chapter contains the following topics:

Topic	Page
TM221M32TK Presentation	278
TM221M32TK Digital Inputs	282
TM221M32TK Digital Outputs	289
TM221M32TK Analog Inputs	296

TM221M32TK Presentation

Overview

The following features are integrated into the TM221M32TK (HE10) controllers:

- 16 digital inputs
  - 12 regular inputs
  - 4 fast inputs (HSC)
- 16 digital outputs
  - 14 regular transistor outputs
  - 2 fast transistor outputs
- 2 analog inputs
- Communication port
  - 2 serial line ports
  - 1 USB mini-B programming port

Description

The following figure shows the different components of the controller:

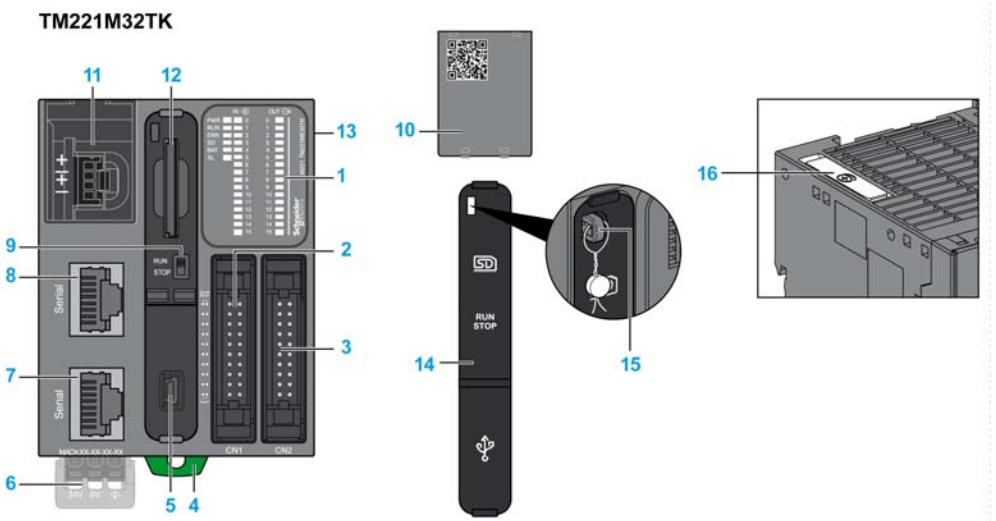

N°	Description	Refer to
1	Status LEDs	–
2	Input HE10 (MIL20) connector	HE10 (MIL 20) connector cable list
3	Output HE10 (MIL20) connector	

N°	Description	Refer to
4	Clip-on lock for 35 mm (1.38 in.) top hat section rail (DIN-rail)	DIN Rail *(see page 83)*
5	USB mini-B programming port / For terminal connection to a programming PC (SoMachine Basic)	USB mini-B programming port *(see page 328)*
6	24 Vdc power supply	Power supply *(see page 98)*
7	Serial line port 2 / RJ45 connector (RS-485)	Serial line 2 *(see page 337)*
8	Serial line port 1 / RJ45 connector (RS-232 or RS-485)	Serial line 1 *(see page 333)*
9	Run/Stop switch	Run/Stop switch *(see page 60)*
10	Removable analog inputs cover	–
11	2 analog inputs	Analog Inputs *(see page 296)*
12	SD Card slot	SD Card Slot *(see page 62)*
13	I/O expansion connector	–
14	Protective cover (SD Card slot, Run/Stop switch and USB mini-B programming port)	–
15	Locking hook	–
16	Battery holder	Installing and Replacing the Battery *(see page 49)*

Status LEDs

The following figure shows the status LEDs:

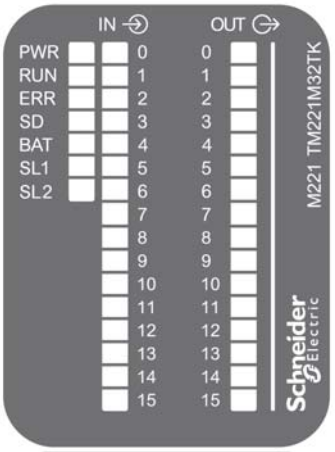

The following table describes the status LEDs:

Label	Function Type	Color	Status	Description		
				Controller States[1]	**Prg Port Communication**	**Application Execution**
PWR	Power	Green	On	Indicates that power is applied.		
			Off	Indicates that power is removed.		
RUN	Machine Status	Green	On	Indicates that the controller is running a valid application.		
			Flashing	Indicates that the controller has a valid application that is stopped.		
			Off	Indicates that the controller is not programmed		
ERR	Error	Red	On*	EXCEPTION	Restricted	NO
			Flashing (with RUN status LED Off)	INTERNAL ERROR	Restricted	NO
			Slow flashing	Minor error detected	Yes	Depends on the RUN status LED
			1 single flash	No application	Yes	Yes
SD	SD Card Access *(see page 62)*	Green	On	Indicates that the SD card is being accessed		
			Flashing	Indicates that an error was detected during the SD card operation.		
			Off	Indicates no access (idle) or no card is present.		
BAT	Battery *(see page 48)*	Red	On	Indicates that the battery needs to be replaced.		
			Flashing	Indicates that the battery charge is low.		
			Off	Indicates that the battery is OK.		
SL1	Serial line 1 *(see page 333)*	Green	On	Indicates the status of Serial line 1		
			Flashing	Indicates activity on Serial line 1		
			Off	Indicates no serial communication		
SL2	Serial line 2 *(see page 337)*	Green	On	Indicates the status of Serial line 2		
			Flashing	Indicates activity on Serial line 2		
			Off	Indicates no serial communication		
* ERR LED is also On during booting process						

[1] For more information about the controller state description, refer to the M221 Logic Controller - Programming Guide.

Dimensions

The following figure shows the external dimensions of the controller:

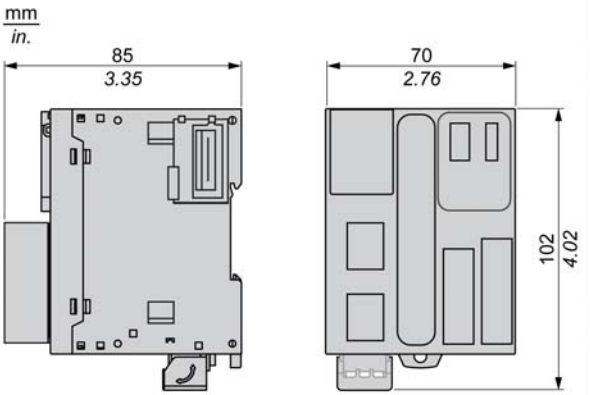

TM221M32TK Digital Inputs

Overview

M221 Logic Controller 16 digital inputs embedded:

- 12 regular inputs
- 4 fast inputs which can be used as 100 kHz HSC inputs

For more information, refer to Input Management *(see page 55)*.

⚠ DANGER

FIRE HAZARD

- Use only the recommended wire sizes for the current capacity of the I/O channels and power supplies.
- For relay output (2 A) wiring, use conductors of at least 0.5 mm2 (AWG 20) with a temperature rating of at least 80 °C (176 °F).
- For common conductors of relay output wiring (7 A), or relay output wiring greater than 2 A, use conductors of at least 1.0 mm2 (AWG 16) with a temperature rating of at least 80 °C (176 °F).

Failure to follow these instructions will result in death or serious injury.

⚠ WARNING

UNINTENDED EQUIPMENT OPERATION

Do not exceed any of the rated values specified in the environmental and electrical characteristics tables.

Failure to follow these instructions can result in death, serious injury, or equipment damage.

Input Management Functions Availability

Embedded digital inputs can be configured as functions (Run/Stop, events, HSC, PWM, PLS).

Inputs not configured as functions are used as regular inputs.

The following table shows the possible usage of the controller digital inputs:

Function		Input Function				HSC/PWM/PLS
		None	Run/Stop	Latch	Event	
Fast Input	I0	X	X	–	–	HSC
	I1	X	X	–	–	HSC
Regular Input	I2	X	X	X	X	–
	I3	X	X	X	X	–
	I4	X	X	X	X	–
	I5	X	X	X	X	–
Fast Input	I6	X	X	–	–	HSC
	I7	X	X	–	–	HSC
Regular Input	I8	X	X	–	–	–
	I9	X	X	–	–	–
	I10	X	X	–	–	–
	I11	X	X	–	–	–
	I12	X	X	–	–	–
	I13	X	X	–	–	–
	I14	X	X	–	–	–
	I15	X	X	–	–	–
X Yes **–** No						

You can use filters and functions to manage the controller inputs *(see page 55)*.

Regular Input Characteristics

The following table describes the characteristics of the TM221M Logic Controller regular inputs:

Characteristic	Value
Number of regular inputs	12 inputs
Number of channel groups	1 common line for I0...I7 1 common line for I8...I15
Input type	Type 1 (IEC/EN 61131-2)
Logic type	Sink/Source

Characteristic		Value
Rated input voltage		24 Vdc
Input voltage range		19.2...28.8 Vdc
Rated input current		7 mA
Input impedance		3.4 kΩ
Input limit values	Voltage at state 1	> 15 Vdc (15...28.8 Vdc)
	Voltage at state 0	< 5 Vdc (0...5 Vdc)
	Current at state 1	> 2.5 mA
	Current at state 0	< 1.0 mA
Derating		see Derating Curve *(see page 286)*
Turn on time		35 µs + filter value[1]
Turn off time		35 µs + filter value[1]
Isolation	Between input and internal logic	500 Vac
Connection type		HE10 (MIL 20) connectors
Connector insertion/removal durability		Over 100 times
Cable	Type	Unshielded
	Length	Maximum 30 m (98 ft)
[1] For more information, refer to Integrator Filter Principle *(see page 55)*		

Fast Input Characteristics

The following table describes the characteristics of the TM221M Logic Controller fast inputs:

Characteristic		Value
Number of fast inputs		4 inputs (I0, I1, I6, I7)
Number of channel groups		1 common line for I0...I7
Input type		Type 1 (IEC/EN 61131-2)
Logic type		Sink/Source
Rated input voltage		24 Vdc
Input voltage range		19.2...28.8 Vdc
Rated input current		4.5 mA
Input impedance		4.9 kΩ
Input limit values	Voltage at state 1	> 15 Vdc (15...28.8 Vdc)
	Voltage at state 0	< 5 Vdc (0...5 Vdc)
	Current at state 1	> 2.5 mA
	Current at state 0	< 1.0 mA

Characteristic		Value
Derating		see Derating Curve *(see page 286)*
Turn on time		5 µs + filter value[1]
Turn off time		5 µs + filter value[1]
HSC maximum frequency	A/B phase	50 kHz (20 µs)
	Pulse/Direction	100 kHz
	Single phase	100 kHz
HSC supported operation mode		• Up/Down counter • Bi-phase counter • Single counter • Frequency meter
Isolation	Between input and internal logic	500 Vac
	Between channel groups	500 Vac
Connection type	TM221M32TK	HE10 (MIL 20) connector
Connector insertion/removal durability		Over 100 times
Cable	Type	Shielded, including the 24 Vdc power supply
	Length	Maximum 10 m (32.8 ft)
[1] For more information, refer to Integrator Filter Principle *(see page 55)*		

Derating Curves

The following figures show the derating curves of the embedded digital inputs:

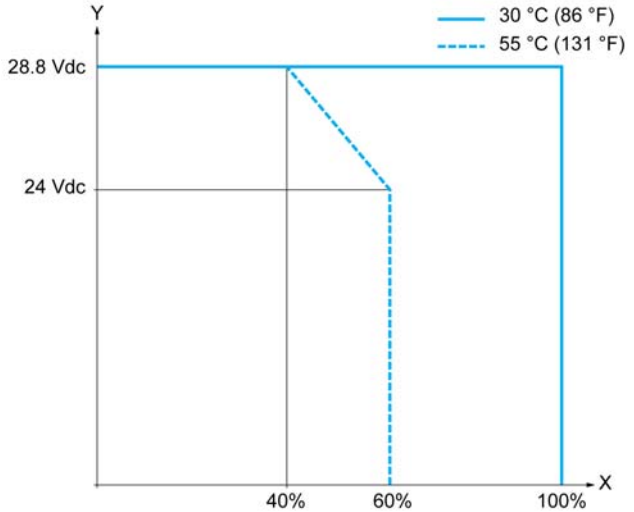

X Input simultaneous ON ratio
Y Input voltage

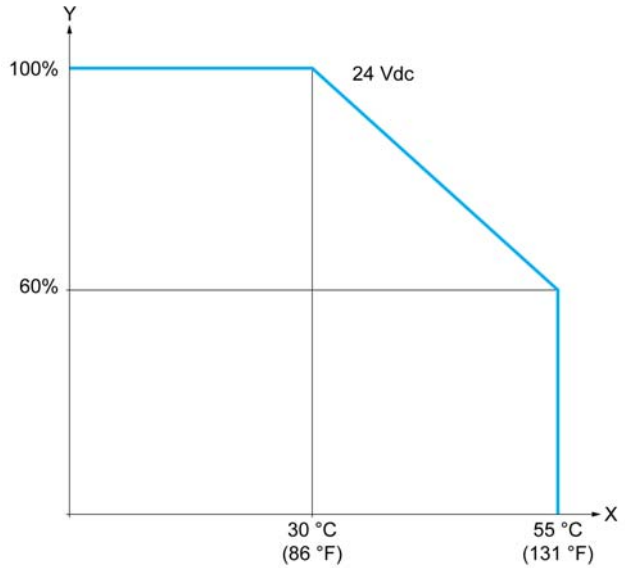

X Ambient temperature
Y Input simultaneous ON ratio

Wiring Diagram with Free-Wire Cable

The following figure shows the connection of the inputs to the sensors:

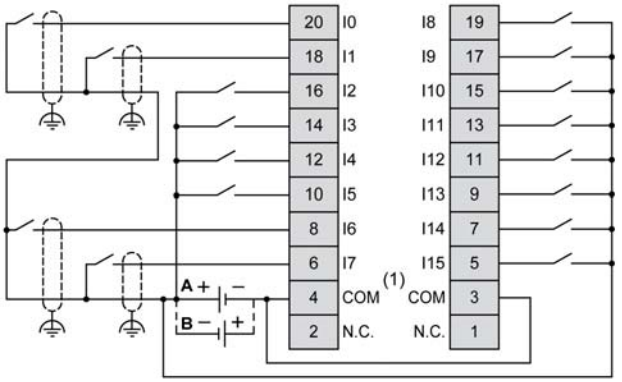

(1) The COM terminals are **not** connected internally.
A Sink wiring (positive logic).
B Source wiring (negative logic).

For more information on the cable color for TWDFCW30K/TWDFCW50K, refer to TWDFCW••K Cable Description *(see page 43)*.

Wiring Diagram with Telefast ABE7E16EPN20 Pre-wiring Sub-base

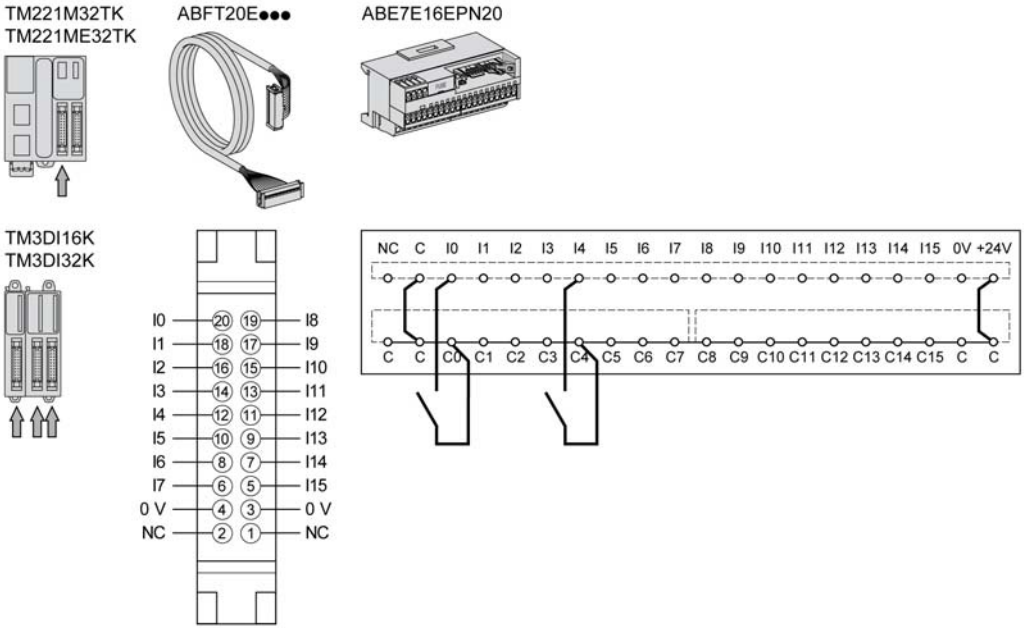

For more information on the Telefast cable, refer to Telefast Pre-wiring Sub-bases *(see page 44)*.

TM221M32TK Digital Outputs

Overview

The TM221M32TK has 16 digital outputs embedded:

- 14 regular transistor outputs
- 2 fast transistor outputs

For more information, refer to Output Management *(see page 57)*.

⚠ DANGER

FIRE HAZARD

- Use only the recommended wire sizes for the current capacity of the I/O channels and power supplies.
- For relay output (2 A) wiring, use conductors of at least 0.5 mm2 (AWG 20) with a temperature rating of at least 80 °C (176 °F).
- For common conductors of relay output wiring (7 A), or relay output wiring greater than 2 A, use conductors of at least 1.0 mm2 (AWG 16) with a temperature rating of at least 80 °C (176 °F).

Failure to follow these instructions will result in death or serious injury.

⚠ WARNING

UNINTENDED EQUIPMENT OPERATION

Do not exceed any of the rated values specified in the environmental and electrical characteristics tables.

Failure to follow these instructions can result in death, serious injury, or equipment damage.

Regular Transistor Output Characteristics

The following table describes the characteristics of the TM221M Logic Controller regular transistor outputs:

Characteristic	Value
Number of regular outputs	14 outputs
Number of channel groups	1 common line for Q0...Q15
Output type	Transistor
Logic type	Source
Rated output voltage	24 Vdc

Characteristic		Value
Output voltage range		19.2...28.8 Vdc
Rated output current		0.1 A
Total output current (Q0...Q15)		1.6 A
Voltage drop		1 Vdc max
Leakage current when switched off		0.1 mA
Maximum power of filament lamp		2.4 W max
Derating		See Derating Curves *(see page 292)*
Turn on time	Q2...Q3	Max. 50 µs
	Q4...Q15	Max. 300 µs
Turn off time	Q2...Q3	Max. 50 µs
	Q4...Q15	Max. 300 µs
Protection against short circuit		Yes
Short circuit output peak current		0.25 A
Automatic rearming after short circuit or overload		Yes, every 1 s
Clamping voltage		Max. 39 Vdc ± 1 Vdc
Switching frequency	Under resistive load	100 Hz max.
Isolation	Between output and internal logic	500 Vac
Connection type	TM221M32TK	HE10 (MIL 20) connectors
Connector insertion/removal durability		Over 100 times
Cable	Type	Unshielded
	Length	Max 30 m (98 ft)
NOTE: Refer to Protecting Outputs from Inductive Load Damage *(see page 96)* for additional information concerning output protection.		

Fast Transistor Output Characteristics

The following table describes the characteristics of the TM221M Logic Controller fast transistor outputs:

Characteristic	Value
Number of fast outputs	2 outputs (Q0, Q1)
Number of channel groups	1 common line for Q0...Q15
Output type	Transistor
Logic type	Source
Rated output voltage	24 Vdc
Output voltage range	19.2...28.8 Vdc

Characteristic		Value
Rated output current		0.1 A
Total output current (Q0...Q15)		1.6 A
Maximum power of filament lamp		2.4 W max
Derating		See Derating Curves *(see page 292)*
Turn on time		Max. 5 µs
Turn off time		Max. 5 µs
Protection against short circuit		Yes
Short circuit output peak current		1.3 A max.
Automatic rearming after short circuit or overload		Yes, every 1 s
Protection against reverse polarity		Yes
Clamping voltage		Typ. 39 Vdc +/- 1 Vdc
Maximum output frequency	PWM	100 kHz
	PLS	100 kHz
Isolation	Between output and internal logic	500 Vac
Connection type	TM221M32TK	HE10 (MIL 20) connectors
Connector insertion/removal durability		Over 100 times
Cable	Type	Shielded, including 24 Vdc power supply
	Length	Maximum 3 m (9.84 ft)

NOTE: Refer to Protecting Outputs from Inductive Load Damage *(see page 96)* for additional information concerning output protection.

Derating Curves

The following figures show the derating curves of the embedded digital outputs:

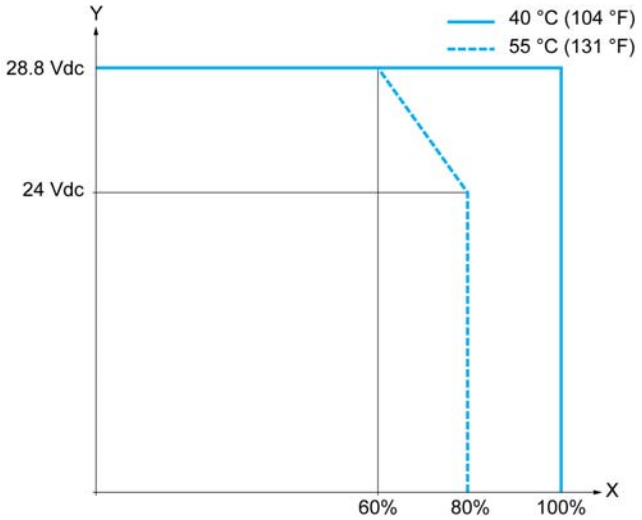

X Output simultaneous ON ratio
Y Output voltage

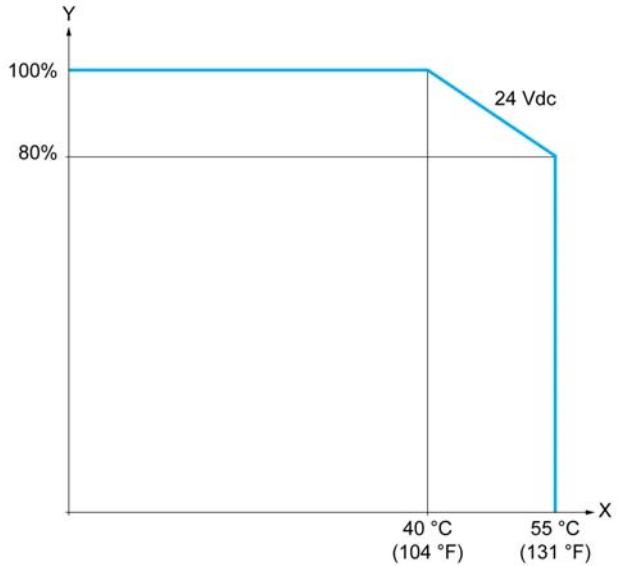

X Ambient temperature
Y Output simultaneous ON ratio

Wiring Diagram with Free-Wire Cable

The following figure shows the connection of the outputs to the load:

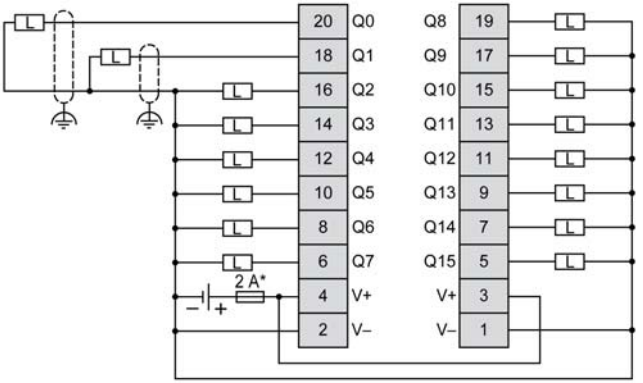

* Type T fuse

For more information on the cable color for TWDFCW30K/TWDFCW50K, refer to TWDFCW••K Cable Description *(see page 43)*.

Wiring Diagram with Telefast ABE7E16SPN2•/ABE7E16SRM20 Pre-wiring Sub-base

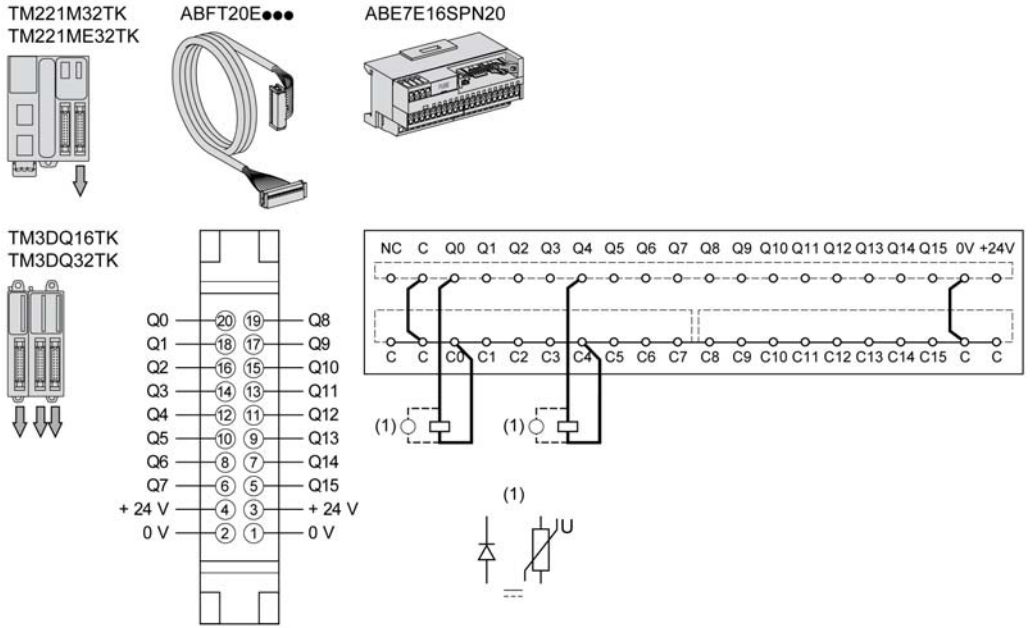

(1) To improve the life time of the contacts, and to protect from potential inductive load damage, it is recommended to connect a free wheeling diode in parallel to each inductive DC load or an RC snubber in parallel of each inductive AC load

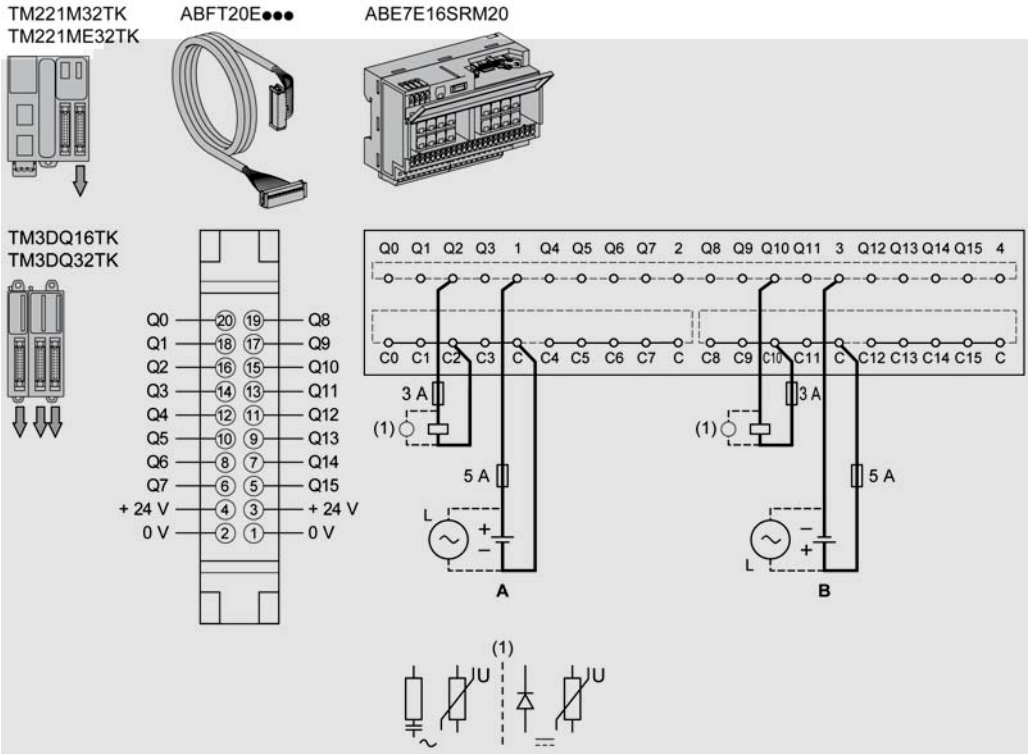

(1) To improve the life time of the contacts, and to protect from potential inductive load damage, it is recommended to connect a free wheeling diode in parallel to each inductive DC load or an RC snubber in parallel of each inductive AC load

A Source wiring (positive logic)

B Sink wiring (negative logic)

For more information on the Telefast cable, refer to Telefast Pre-wiring Sub-bases *(see page 44)*.

TM221M32TK Analog Inputs

Overview

The M221 Logic Controllers have 2 analog inputs embedded.

⚠ DANGER

FIRE HAZARD

- Use only the recommended wire sizes for the current capacity of the I/O channels and power supplies.
- For relay output (2 A) wiring, use conductors of at least 0.5 mm2 (AWG 20) with a temperature rating of at least 80 °C (176 °F).
- For common conductors of relay output wiring (7 A), or relay output wiring greater than 2 A, use conductors of at least 1.0 mm2 (AWG 16) with a temperature rating of at least 80 °C (176 °F).

Failure to follow these instructions will result in death or serious injury.

⚠ WARNING

UNINTENDED EQUIPMENT OPERATION

Do not exceed any of the rated values specified in the environmental and electrical characteristics tables.

Failure to follow these instructions can result in death, serious injury, or equipment damage.

The following procedure describes how to mount the analog cables:

Step	Action
1	Use a screw-driver to remove the protective cover. 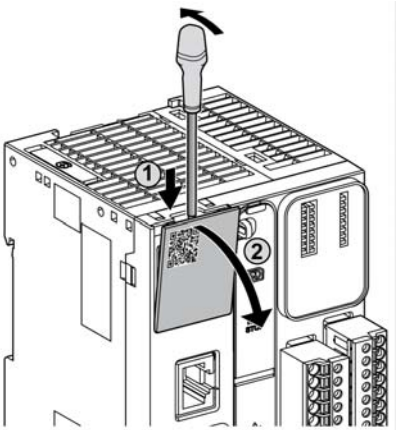
2	Push until you hear it “click”. 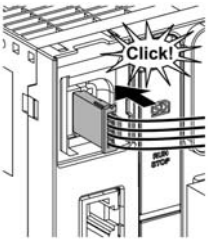
3	Replace the protective cover. 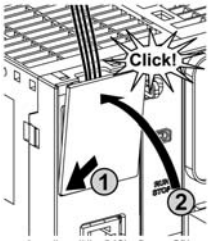

Analog Input Characteristics

The following table describes the characteristics of the M221 Logic Controller with analog inputs:

Characteristic		Voltage Input
Number of maximum inputs		2 inputs
Input type		Single-ended
Rated input range		0...+10 Vdc
Digital resolution		10 bits
Input value of LSB		10 mV
Input impedance		100 kΩ
Input delay time		12 ms
Sample duration time		1 ms per channel + 1 scan time
Accuracy		± 1 % of the full scale
Noise resistance - maximum temporary deviation during perturbations		± 5 % maximum of the full scale when EMC perturbation is applied to the power and I/O wiring
Isolation	Between input and internal logic	Not isolated
Connection type		Specific connector and cable (supplied)
Connector insertion/removal durability		Over 100 times
Cable	Type	Proprietary (supplied)
	Length	1 m (3.3 ft)

Wiring Diagram

The following figure shows the wiring diagram of the Modicon M221 Logic Controller analog inputs:

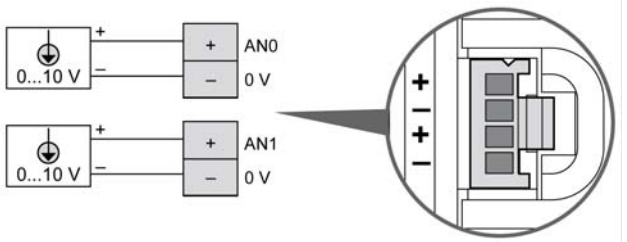

The (-) poles are connected internally.

Pin	Wire Color
AN0	Red
0 V	Black

Pin	Wire Color
AN1	Red
0 V	Black

For more information, refer to the Wiring Rules and Recommendation *(see page 92)*.

Chapter 22
TM221ME32TK

Overview

This chapter describes the TM221ME32TK controller.

What Is in This Chapter?

This chapter contains the following topics:

Topic	Page
TM221ME32TK Presentation	302
TM221ME32TK Digital Inputs	306
TM221ME32TK Digital Outputs	313
TM221ME32TK Analog Inputs	321

TM221ME32TK Presentation

Overview

The following features are integrated into the TM221ME32TK (HE10) controllers:

- 16 digital inputs
  - 12 regular inputs
  - 4 fast inputs (HSC)
- 16 digital outputs
  - 14 regular transistor outputs
  - 2 fast transistor outputs
- 2 analog inputs
- Communication port
  - 1 serial line port
  - 1 USB mini-B programming port
  - 1 Ethernet port

Description

The following figure shows the different components of the controller:

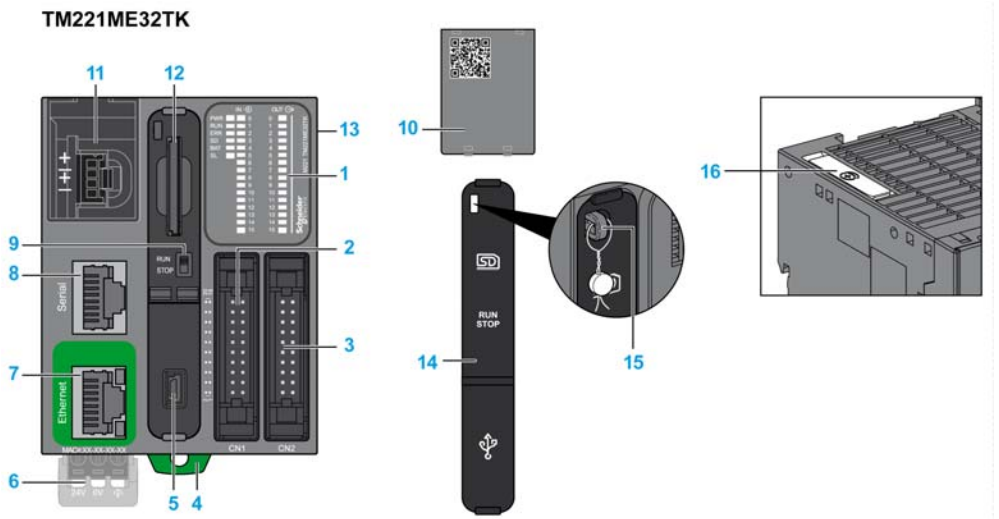

N°	Description	Refer to
1	Status LEDs	–
2	Input HE10 (MIL20) connector	HE10 (MIL 20) connector cable list
3	Output HE10 (MIL20) connector	

N°	Description	Refer to
4	Clip-on lock for 35 mm (1.38 in.) top hat section rail (DIN-rail)	DIN Rail *(see page 83)*
5	USB mini-B programming port / For terminal connection to a programming PC (SoMachine Basic)	USB mini-B programming port *(see page 328)*
6	24 Vdc power supply	Power supply *(see page 98)*
7	Ethernet port / RJ45 connector	Ethernet port *(see page 330)*
8	Serial line port 1 / RJ45 connector (RS-232 or RS-485)	Serial line 1 *(see page 333)*
9	Run/Stop switch	Run/Stop switch *(see page 60)*
10	Removable analog inputs cover	–
11	2 analog inputs	Analog Inputs *(see page 321)*
12	SD Card slot	SD Card Slot *(see page 62)*
13	I/O expansion connector	–
14	Protective cover (SD Card slot, Run/Stop switch and USB mini-B programming port)	–
15	Locking hook	–
16	Battery holder	Installing and Replacing the Battery *(see page 49)*

Status LEDs

The following figure shows the status LEDs:

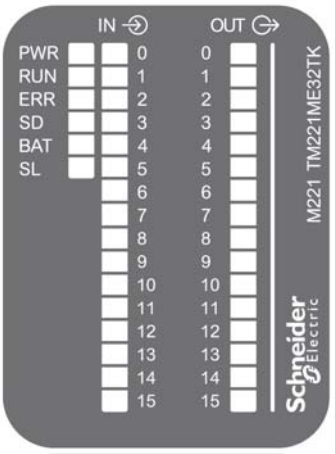

The following table describes the status LEDs:

Label	Function Type	Color	Status	Description		
				Controller States[1]	**Prg Port Communication**	**Application Execution**
PWR	Power	Green	On	Indicates that power is applied.		
			Off	Indicates that power is removed.		
RUN	Machine Status	Green	On	Indicates that the controller is running a valid application.		
			Flashing	Indicates that the controller has a valid application that is stopped.		
			Off	Indicates that the controller is not programmed		
ERR	Error	Red	On*	EXCEPTION	Restricted	NO
			Flashing (with RUN status LED Off)	INTERNAL ERROR	Restricted	NO
			Slow flash	Minor error detected	Yes	Depends on the RUN status LED
			1 single flash	No application	Yes	Yes
SD	SD Card Access *(see page 62)*	Green	On	Indicates that the SD card is being accessed		
			Flashing	Indicates that an error was detected during the SD card operation.		
			Off	Indicates no access (idle) or no card is present.		
BAT	Battery *(see page 48)*	Red	On	Indicates that the battery needs to be replaced.		
			Flashing	Indicates that the battery charge is low.		
			Off	Indicates that the battery is OK.		
SL	Serial line 1 *(see page 333)*	Green	On	Indicates the status of Serial line 1		
			Flashing	Indicates activity on Serial line 1		
			Off	Indicates no serial communication		
* ERR LED is also On during booting process **NOTE:** For information about the LEDs integrated into the Ethernet connector, refer to Ethernet Status LEDs *(see page 332)*						

[1] For more information about the controller state description, refer to the M221 Logic Controller - Programming Guide.

Dimensions

The following figure shows the external dimension controller:

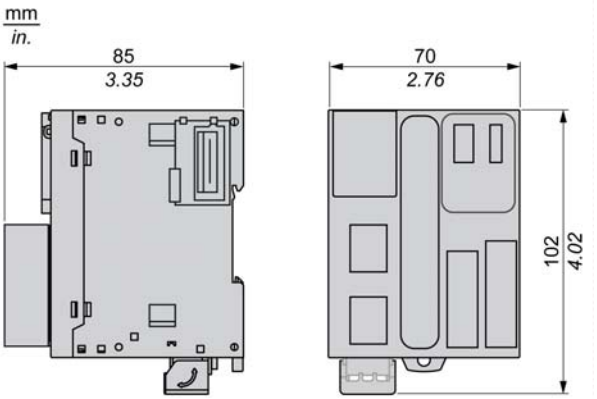

TM221ME32TK Digital Inputs

Overview

M221 Logic Controller has 16 digital inputs embedded:

- 12 regular inputs
- 4 fast inputs which can be used as 100 kHz HSC inputs

For more information, refer to Input Management *(see page 55)*.

⚠ DANGER

FIRE HAZARD

- Use only the recommended wire sizes for the current capacity of the I/O channels and power supplies.
- For relay output (2 A) wiring, use conductors of at least 0.5 mm2 (AWG 20) with a temperature rating of at least 80 °C (176 °F).
- For common conductors of relay output wiring (7 A), or relay output wiring greater than 2 A, use conductors of at least 1.0 mm2 (AWG 16) with a temperature rating of at least 80 °C (176 °F).

Failure to follow these instructions will result in death or serious injury.

⚠ WARNING

UNINTENDED EQUIPMENT OPERATION

Do not exceed any of the rated values specified in the environmental and electrical characteristics tables.

Failure to follow these instructions can result in death, serious injury, or equipment damage.

Input Management Functions Availability

Embedded digital inputs can be configured as functions (Run/Stop, events, HSC, PWM, PLS

Inputs not configured as functions are used as regular inputs.

The following table shows the possible usage of the controller digital inputs:

Function		Input Function				HSC/PWM/PLS
		None	Run/Stop	Latch	Event	
Fast Input	I0	X	X	–	–	HSC
	I1	X	X	–	–	HSC
Regular Input	I2	X	X	X	X	–
	I3	X	X	X	X	–
	I4	X	X	X	X	–
	I5	X	X	X	X	–
Fast Input	I6	X	X	–	–	HSC
	I7	X	X	–	–	HSC
Regular Input	I8	X	X	–	–	–
	I9	X	X	–	–	–
	I10	X	X	–	–	–
	I11	X	X	–	–	–
	I12	X	X	–	–	–
	I13	X	X	–	–	–
	I14	X	X	–	–	–
	I15	X	X	–	–	–
X Yes **–** No						

You can use filters and functions to manage the controller inputs *(see page 55)*.

Regular Input Characteristics

The following table describes the characteristics of the TM221M Logic Controller regular inputs:

Characteristic	Value
Number of regular inputs	12 inputs
Number of channel groups	1 common line for I0...I7 1 common line for I8...I15
Input type	Type 1 (IEC/EN 61131-2)
Logic type	Sink/Source

Characteristic		Value
Rated input voltage		24 Vdc
Input voltage range		19.2...28.8 Vdc
Rated input current		7 mA
Input impedance		3.4 kΩ
Input limit values	Voltage at state 1	> 15 Vdc (15...28.8 Vdc)
	Voltage at state 0	< 5 Vdc (0...5 Vdc)
	Current at state 1	> 2.5 mA
	Current at state 0	< 1.0 mA
Derating		see Derating Curve *(see page 308)*
Turn on time		35 µs + filter value[1]
Turn off time		I2...I5: 35 µs[1] I8...I15: 100 µs[1]
Isolation	Between input and internal logic	500 Vac
Connection type		HE10 (MIL 20) connectors
Connector insertion/removal durability		Over 100 times
Cable	Type	Unshielded
	Length	Maximum 30 m (98 ft)
[1] For more information, refer to Integrator Filter Principle *(see page 55)*		

Fast Input Characteristics

The following table describes the characteristics of the TM221M Logic Controller fast inputs:

Characteristic	Value
Number of fast inputs	4 inputs (I0, I1, I6, I7)
Number of channel groups	1 common line for I0...I7
Input type	Type 1 (IEC/EN 61131-2)
Logic type	Sink/Source
Rated input voltage	24 Vdc
Input voltage range	19.2...28.8 Vdc
Rated input current	4.5 mA
Input impedance	4.9 kΩ

Characteristic		Value
Input limit values	Voltage at state 1	> 15 Vdc (15...28.8 Vdc)
	Voltage at state 0	< 5 Vdc (0...5 Vdc)
	Current at state 1	> 2.5 mA
	Current at state 0	< 1.0 mA
Derating		see Derating Curve *(see page 310)*
Turn on time		5 µs + filter value[1]
Turn off time		5 µs + filter value[1]
HSC maximum frequency	A/B phase	50 kHz (20 µs)
	Pulse/Direction	100 kHz
	Single phase	100 kHz
HSC supported operation mode		• Up/Down counter • Bi-phase counter • Single counter • Frequency meter
Isolation	Between input and internal logic	500 Vac
	Between channel groups	500 Vac
Connection type	TM221ME32TK	HE10 (MIL 20) connector
Connector insertion/removal durability		Over 100 times
Cable	Type	Shielded, including the 24 Vdc power supply
	Length	Maximum 10 m (32.8 ft)
[1] For more information, refer to Integrator Filter Principle *(see page 55)*		

Derating Curves

The following figures show the derating curves of the embedded digital inputs:

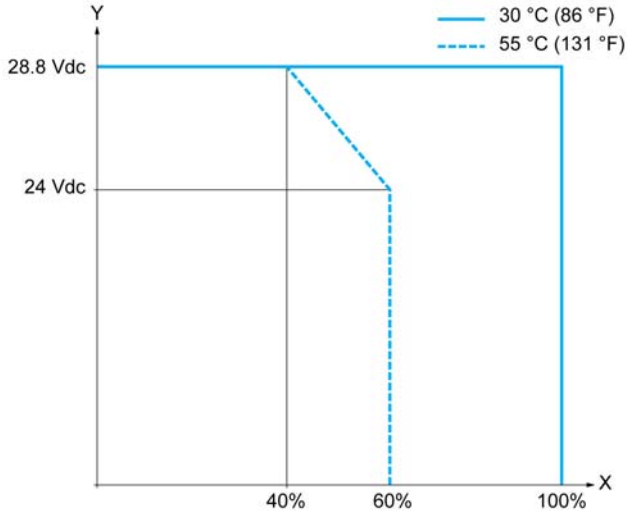

X Input simultaneous ON ratio
Y Input voltage

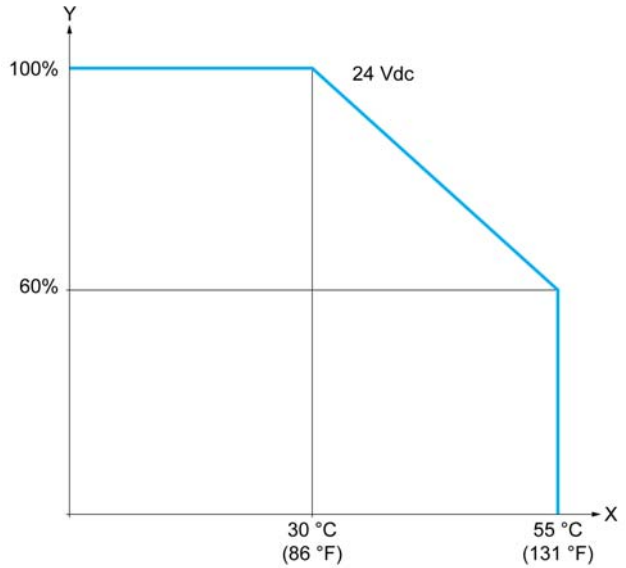

X Ambient temperature
Y Input simultaneous ON ratio

Wiring Diagram with Free-Wire Cable

The following figure shows the connection of the inputs to the sensors:

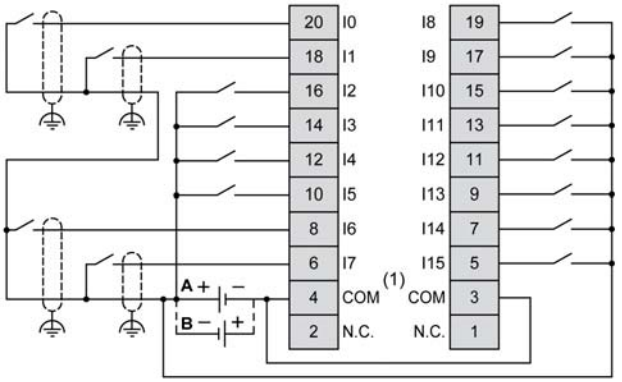

(1) The COM terminals are **not** connected internally.
A Sink wiring (positive logic).
B Source wiring (negative logic).

For more information on the cable color for TWDFCW30K/TWDFCW50K, refer to TWDFCW••K Cable Description *(see page 44)*.

Wiring Diagram with Telefast ABE7E16EPN20 Pre-wiring Sub-base

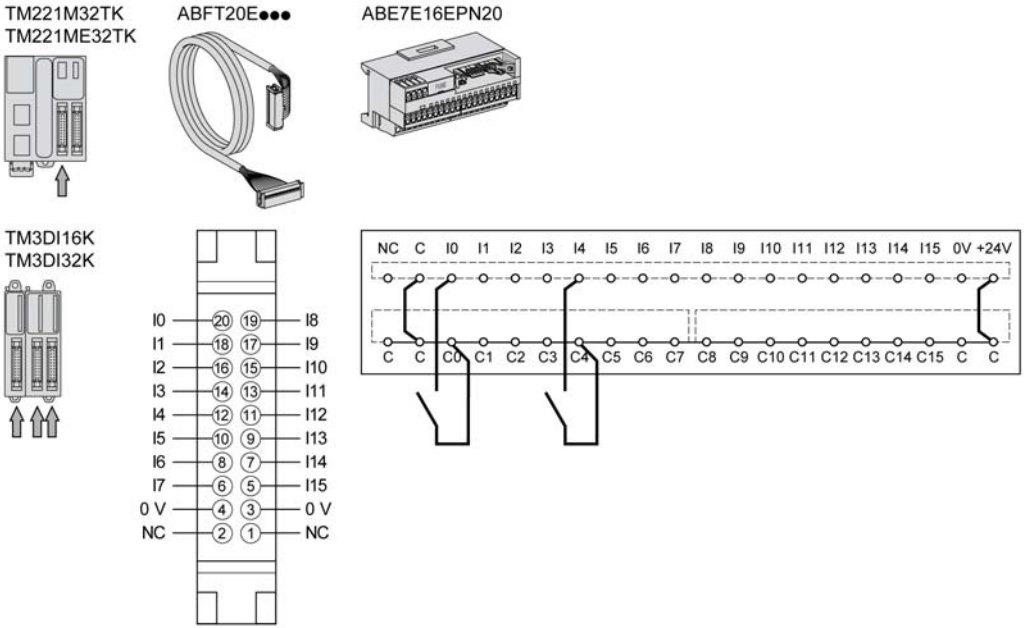

For more information on the Telefast cable, refer to Telefast Pre-wiring Sub-bases *(see page 44)*.

TM221ME32TK Digital Outputs

Overview

The TM221ME32TK has 16 digital outputs embedded:

- 14 regular transistor outputs
- 2 fast transistor outputs

For more information, refer to Output Management *(see page 57)*.

⚠ DANGER

FIRE HAZARD

- Use only the recommended wire sizes for the current capacity of the I/O channels and power supplies.
- For relay output (2 A) wiring, use conductors of at least 0.5 mm2 (AWG 20) with a temperature rating of at least 80 °C (176 °F).
- For common conductors of relay output wiring (7 A), or relay output wiring greater than 2 A, use conductors of at least 1.0 mm2 (AWG 16) with a temperature rating of at least 80 °C (176 °F).

Failure to follow these instructions will result in death or serious injury.

⚠ WARNING

UNINTENDED EQUIPMENT OPERATION

Do not exceed any of the rated values specified in the environmental and electrical characteristics tables.

Failure to follow these instructions can result in death, serious injury, or equipment damage.

Regular Transistor Output Characteristics

The following table describes the characteristics of the TM221M Logic Controller regular transistor outputs:

Characteristic	Value
Number of regular outputs	14 outputs
Number of channel groups	1 common line for Q0...Q15
Output type	Transistor
Logic type	Source
Rated output voltage	24 Vdc

Characteristic		Value
Output voltage range		19.2...28.8 Vdc
Rated output current		0.1 A
Total output current (Q0...Q15)		1.6 A
Voltage drop		1 Vdc max
Leakage current when switched off		0.1 mA
Maximum power of filament lamp		2.4 W max
Derating		See Derating Curves *(see page 316)*
Turn on time	Q2...Q3	Max. 50 µs
	Q4...Q15	Max. 300 µs
Turn off time	Q2...Q3	Max. 50 µs
	Q4...Q15	Max. 300 µs
Protection against short circuit		Yes
Short circuit output peak current		0.25 A
Automatic rearming after short circuit or overload		Yes, every 1 s
Clamping voltage		Max. 39 Vdc ± 1 Vdc
Switching frequency	Under resistive load	100 Hz max.
Isolation	Between output and internal logic	500 Vac
Connection type	TM221ME32TK	HE10 (MIL 20) connectors
Connector insertion/removal durability		Over 100 times
Cable	Type	Unshielded
	Length	Max 30 m (98 ft)
NOTE: Refer to Protecting Outputs from Inductive Load Damage *(see page 96)* for additional information concerning output protection.		

Fast Transistor Output Characteristics

The following table describes the characteristics of the TM221M Logic Controller fast transistor outputs:

Characteristic	Value
Number of fast outputs	2 outputs (Q0, Q1)
Number of channel groups	1 common line for Q0...Q15
Output type	Transistor
Logic type	Source
Rated output voltage	24 Vdc
Output voltage range	19.2...28.8 Vdc

Characteristic		Value
Rated output current		0.1 A
Total output current (Q0...Q15)		1.6 A
Maximum power of filament lamp		2.4 W max
Derating		See Derating Curves *(see page 316)*
Turn on time		Max. 5 µs
Turn off time		Max. 5 µs
Protection against short circuit		Yes
Short circuit output peak current		1.3 A max.
Automatic rearming after short circuit or overload		Yes, every 1 s
Protection against reverse polarity		Yes
Clamping voltage		Typ. 39 Vdc +/- 1 Vdc
Maximum output frequency	PWM/PLS	100 kHz
Isolation	Between output and internal logic	500 Vac
Connection type	TM221ME32TK	HE10 (MIL 20) connectors
Connector insertion/removal durability		Over 100 times
Cable	Type	Shielded, including 24 Vdc power supply
	Length	Maximum 3 m (9.84 ft)
NOTE: Refer to Protecting Outputs from Inductive Load Damage *(see page 96)* for additional information concerning output protection.		

Derating Curves

The following figures show the derating curves of the embedded digital outputs:

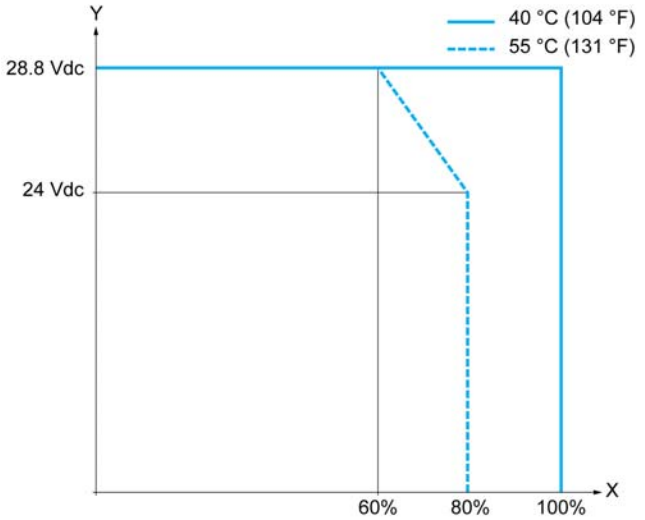

X Output simultaneous ON ratio
Y Output voltage

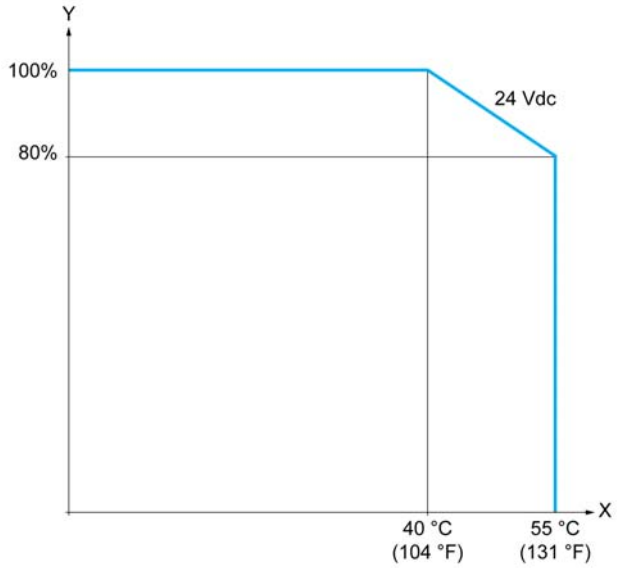

X Ambient temperature
Y Output simultaneous ON ratio

Wiring Diagram with Free-Wire Cable

The following figure shows the connection of the outputs to the load:

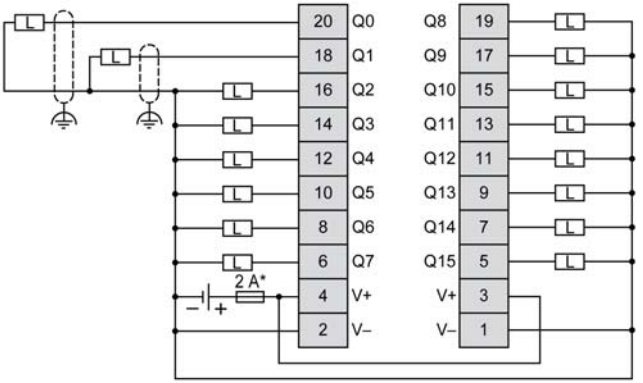

* Type T fuse

For more information on the cable color for TWDFCW30K/TWDFCW50K, refer to TWDFCW••K Cable Description *(see page 43)*.

Wiring Diagram with Telefast ABE7E16SPN2•/ABE7E16SRM20 Pre-wiring Sub-base

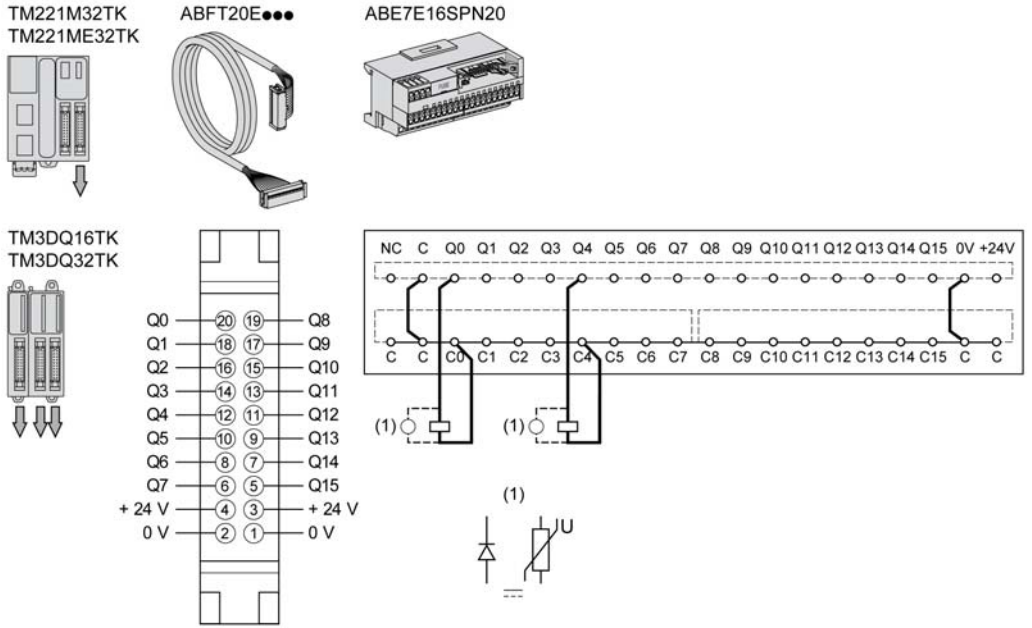

(1) To improve the life time of the contacts, and to protect from potential inductive load damage, it is recommended to connect a free wheeling diode in parallel to each inductive DC load or an RC snubber in parallel of each inductive AC load

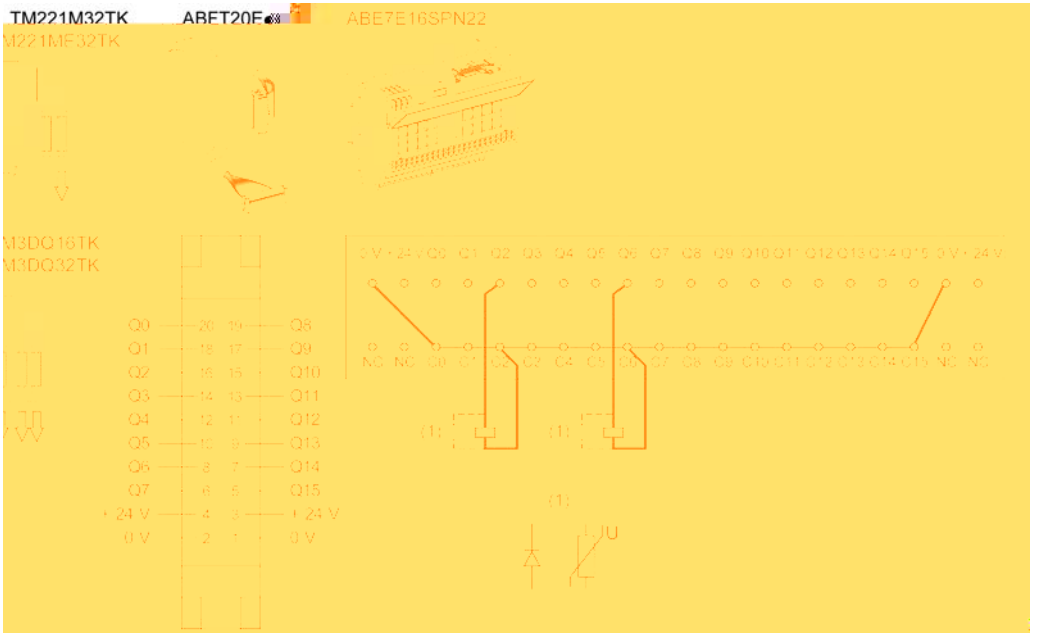

(1) To improve the life time of the contacts, and to protect from potential inductive load damage, it is recommended to connect a free wheeling diode in parallel to each inductive DC load or an RC snubber in parallel of each inductive AC load

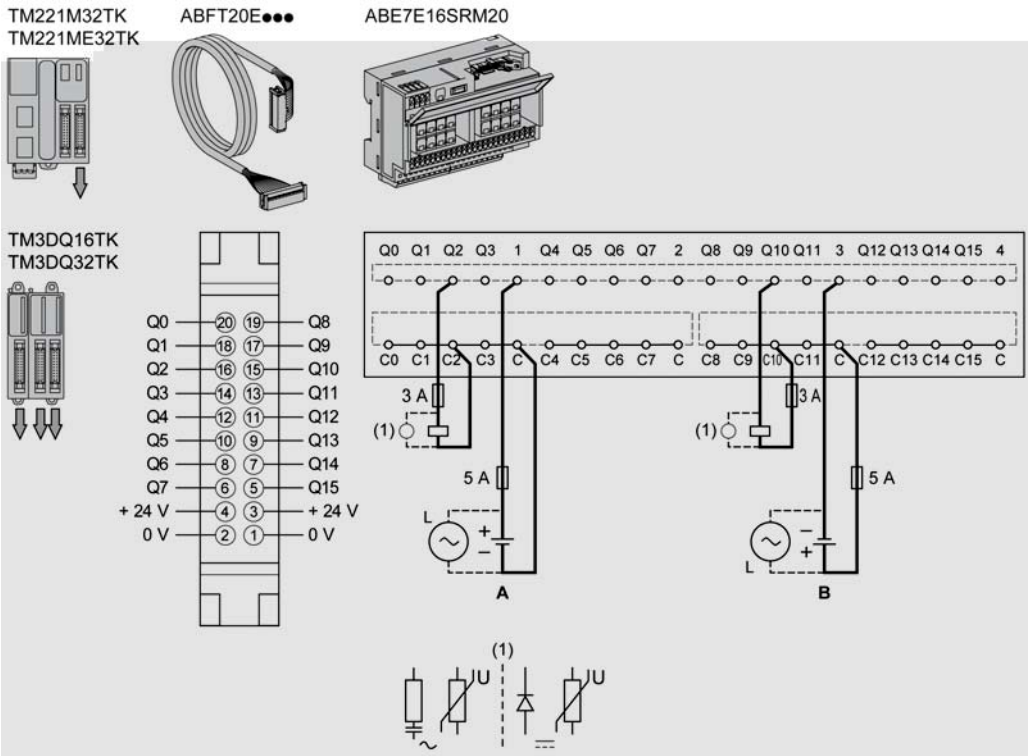

(1) To improve the life time of the contacts, and to protect from potential inductive load damage, it is recommended to connect a free wheeling diode in parallel to each inductive DC load or an RC snubber in parallel of each inductive AC load

A Source wiring (positive logic)

B Sink wiring (negative logic)

For more information on the Telefast cable, refer to Telefast Pre-wiring Sub-bases *(see page 44)*.

TM221ME32TK Analog Inputs

Overview

The M221 Logic Controllers have 2 analog inputs embedded.

⚠ DANGER

FIRE HAZARD

- Use only the recommended wire sizes for the current capacity of the I/O channels and power supplies.
- For relay output (2 A) wiring, use conductors of at least 0.5 mm2 (AWG 20) with a temperature rating of at least 80 °C (176 °F).
- For common conductors of relay output wiring (7 A), or relay output wiring greater than 2 A, use conductors of at least 1.0 mm2 (AWG 16) with a temperature rating of at least 80 °C (176 °F).

Failure to follow these instructions will result in death or serious injury.

⚠ WARNING

UNINTENDED EQUIPMENT OPERATION

Do not exceed any of the rated values specified in the environmental and electrical characteristics tables.

Failure to follow these instructions can result in death, serious injury, or equipment damage.

The following procedure describes how to mount the analog cables:

Step	Action
1	Use a screw-driver to remove the protective cover. 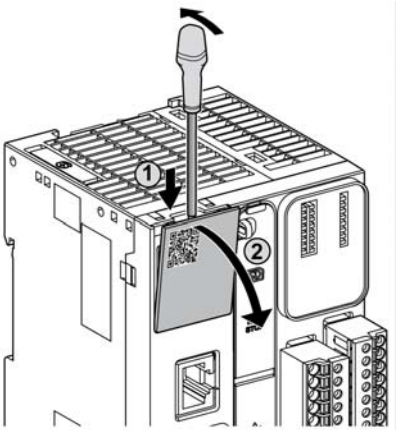
2	Push until you hear it “click”. 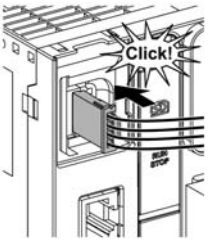
3	Replace the protective cover. 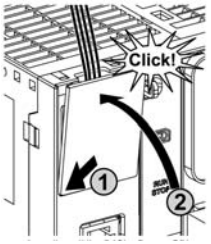

Analog Input Characteristics

The following table describes the characteristics of the M221 Logic Controller with analog inputs:

Characteristic		Voltage Input
Number of maximum inputs		2 inputs
Input type		Single-ended
Rated input range		0...+10 Vdc
Digital resolution		10 bits
Input value of LSB		10 mV
Input impedance		100 kΩ
Input delay time		12 ms
Sample duration time		1 ms per channel + 1 scan time
Accuracy		± 1 % of the full scale
Noise resistance - maximum temporary deviation during perturbations		± 5 % maximum of the full scale when EMC perturbation is applied to the power and I/O wiring
Isolation	Between input and internal logic	Not isolated
Connection type		Specific connector and cable (supplied)
Connector insertion/removal durability		Over 100 times
Cable	Type	Proprietary (supplied)
	Length	1 m (3.3 ft)

Wiring Diagram

The following figure shows the wiring diagram of the Modicon M221 Logic Controller analog inputs:

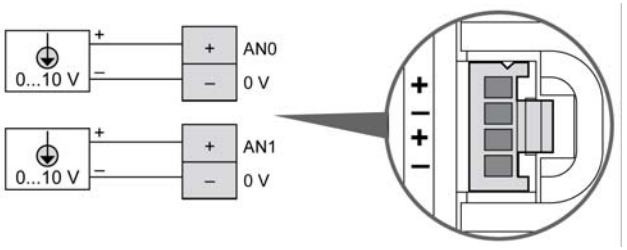

The (-) poles are connected internally.

Pin	Wire Color
AN0	Red
0 V	Black

Pin	Wire Color
AN1	Red
0 V	Black

For more information, refer to the Wiring Rules and Recommendation *(see page 92)*.

Part IV
Modicon M221 Logic Controller Communication

What Is in This Part?

This part contains the following chapters:

Chapter	Chapter Name	Page
23	Integrated Communication Ports	327
24	Connecting the M221 Logic Controller to a PC	341

Chapter 23
Integrated Communication Ports

What Is in This Chapter?

This chapter contains the following topics:

Topic	Page
USB Mini-B Programming Port	328
Ethernet Port	330
Serial Line 1	333
Serial Line 2	337

USB Mini-B Programming Port

Overview

The USB Mini-B Port is the programming port you can use to connect a PC with a USB host port using SoMachine Basic software. Using a typical USB cable, this connection is suitable for quick updates of the program or short duration connections to perform maintenance and inspect data values. It is not suitable for long-term connections such as commissioning or monitoring without the use of specially adapted cables to help minimize electromagnetic interference.

⚠ WARNING

INOPERABLE EQUIPMENT OR UNINTENDED EQUIPMENT OPERATION

- You must use a shielded USB cable such as a BMX XCAUSBH0•• secured to the functional ground (FE) of the system for any long-term connection.
- Do not connect more than one controller at a time using USB connections.

Failure to follow these instructions can result in death, serious injury, or equipment damage.

The following figure shows the location of the USB Mini-B programming port on the TM221C Logic Controller:

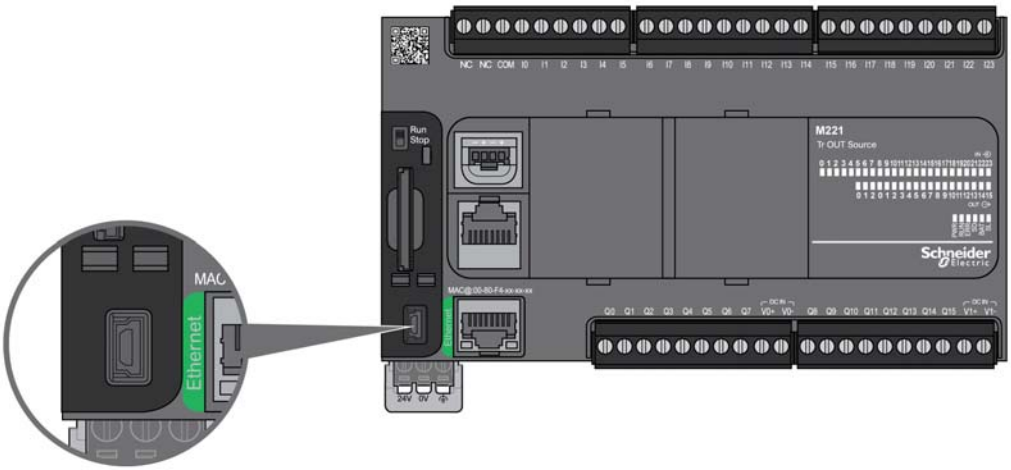

The following figure shows the location of the USB Mini-B programming port on the TM221M Logic Controller:

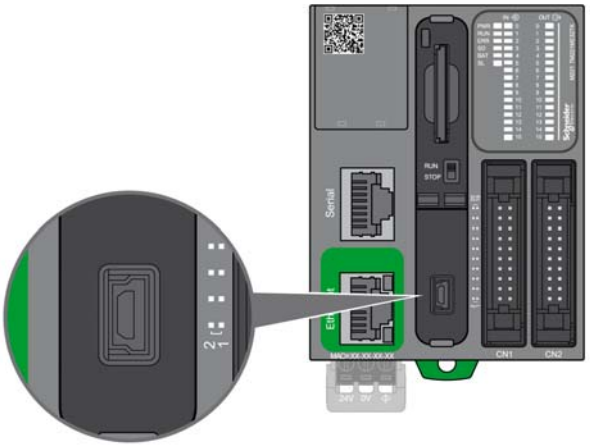

Characteristics

This table describes the characteristics of the USB Mini-B programming port:

Parameter	USB Programming Port
Function	Compatible with USB 2.0
Connector type	Mini-B
Isolation	None
Cable type	Shielded

Ethernet Port

Overview

The TM221•E••• are equipped with an Ethernet communication port.

The following figure shows the location of the Ethernet port on the TM221C Logic Controller:

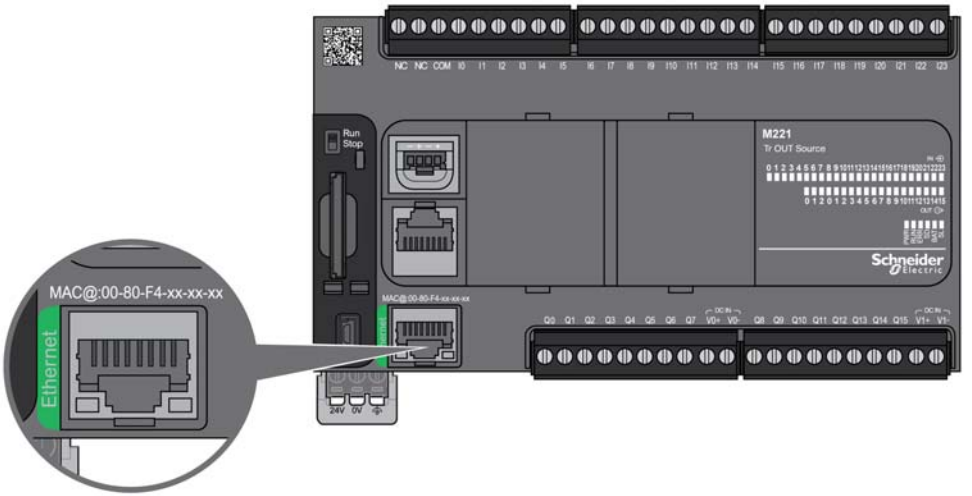

The following figure shows the location of the Ethernet port on the TM221M Logic Controller:

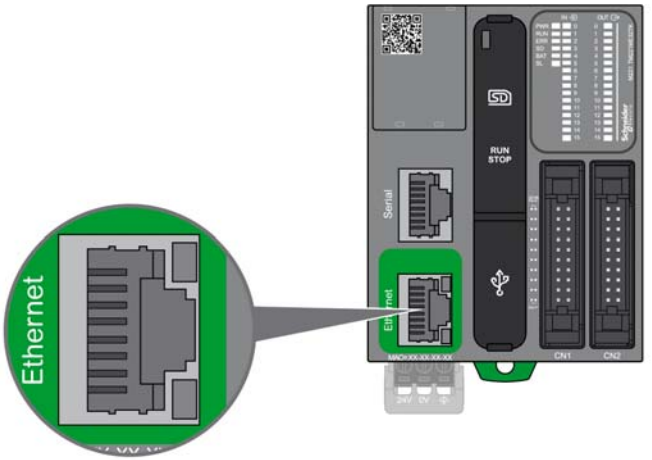

Characteristics

The following table describes Ethernet characteristics:

Pin Assignment

The following figure shows the RJ45 Ethernet connector pin assignment:

The following table describes the RJ45 Ethernet connector pins:

NOTE: The controller supports the MDI/MDIX auto-crossover cable function. It is not necessary to use special Ethernet crossover cables to connect devices directly to this port (connections without

Status LED

The following figures show the RJ45 connector status LED:

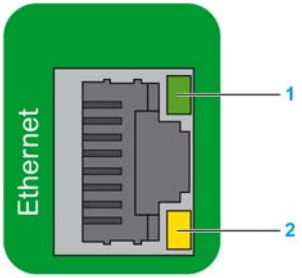

The following table describes the Ethernet status LEDs:

Label	Description	LED		
		Color	**Status**	**Description**
1: ACT	Ethernet activity	Green	Off	No activity
			Flashing green	Activity
2: LINK	Ethernet link	Yellow	Off	No link
			Flashing yellow	Link

Serial Line 1

Overview

The serial line 1:

- can be used to communicate with devices supporting the Modbus protocol as either master or slave, ASCII protocol (printer, modem...) and SoMachine Basic Protocol (HMI,...).
- provides a 5 Vdc power distribution.

The following figure shows the location of the serial line 1 port on the TM221C Logic Controller:

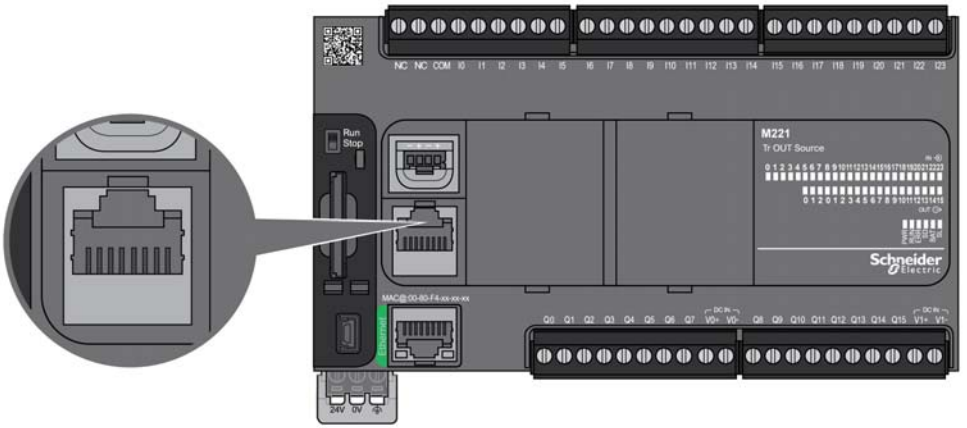

The following figure shows the location of the serial line 1 port on the TM221M Logic Controller:

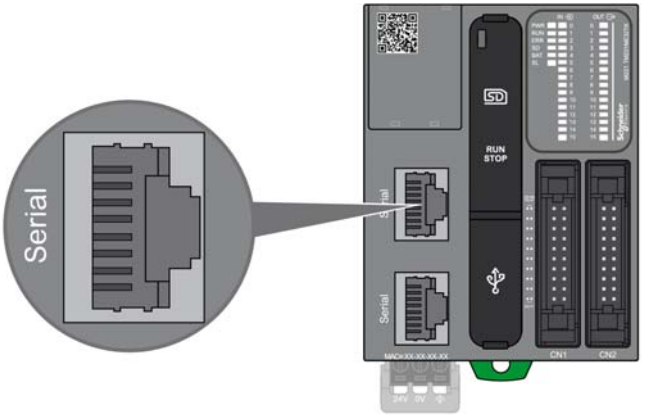

Characteristics

Characteristic		Description
Function		RS485 or RS232 software configured
Connector type		RJ45
Isolation		Non-isolated
Maximum baud rate		1200 up to 115 200 bps
Cable	Type	Shielded
	Maximum length	15 m (49 ft) for RS485 3 m (9.84 ft) for RS232
Polarization		Software configuration is used to connect when the node is configured as a Master. 560 Ω resistors are optional.
5 Vdc power supply for RS485		Yes

NOTE: Some devices provide voltage on RS485 serial connections. It is necessary to avoid connection of these voltage lines to your controller as they may damage the controller serial port electronics and render the serial port inoperable.

NOTICE
INOPERABLE EQUIPMENT Use only the VW3A8306R•• serial cable to connect RS485 devices to your controller. **Failure to follow these instructions can result in equipment damage.**

Pin Assignment

The following figure shows the pins of the RJ45 connector:

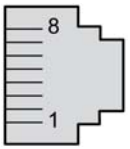

The table below describes the pin assignment of the RJ45 connector:

Pin	RS232	RS485
1	RxD	N.C.
2	TxD	N.C.
3	RTS	N.C.
* 5 Vdc delivered by the controller. Do not connect.		

Pin	RS232	RS485
4	N.C.	D1
5	N.C.	D0
6	CTS	N.C.
7	N.C.*	5 Vdc
8	Common	Common
* 5 Vdc delivered by the controller. Do not connect.		

CTS: Clear To Send

N.C.: No Connection

RTS: Ready To Send

RxD: Received Data

TxD: Transmitted Data

⚠ WARNING

UNINTENDED EQUIPMENT OPERATION

Do not connect wires to unused terminals and/or terminals indicated as “No Connection (N.C.)”.

Failure to follow these instructions can result in death, serious injury, or equipment damage.

Status LED

The following figure shows the serial line 1 status LED of the TM221C Logic Controller:

The following figure shows the serial line 1 status LED of the TM221M Logic Controller:

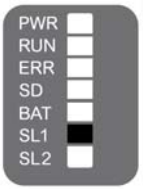

The table below describes the status LED of the serial line 1:

Label	Description	LED		
		Color	Status	Description
SL1	Serial Line 1	Green	On	Indicates the activity of the serial line 1
			Off	Indicates no serial communication

Serial Line 2

Overview

The serial line 2 is used to communicate with devices supporting the Modbus protocol as either a master or slave and ASCII Protocol (printer, modem...) and supports RS485 and terminal block.

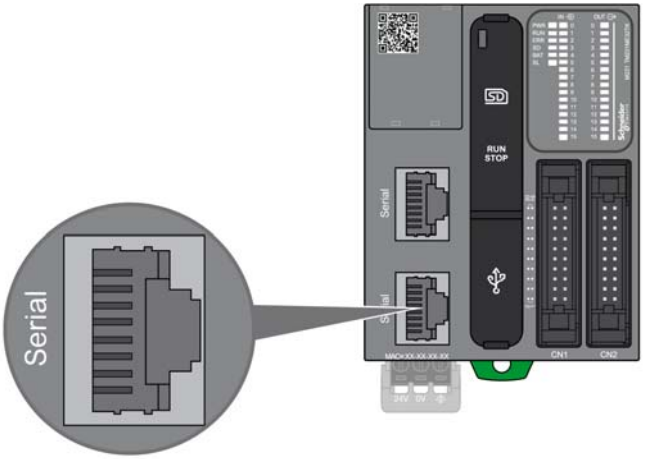

Characteristics

Characteristic		Description
Function		RS485 software configured
Connector type		RJ45
Isolation		Non-isolated
Maximum baud rate		1200 up to 115 200 bps
Cable	Type	Shielded
	Maximum length	15 m (49 ft) for RS485
Polarization		Software configuration is used to connect when the node is configured as a Master. 560 Ω resistors are optional.
5 Vdc power supply for RS485		No

Pin Assignment

The following figure shows the pins of the RJ45 connector:

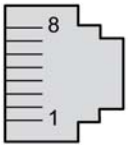

The table below describes the pin assignment for RS485:

Pin	RS485
1	N.C.
2	N.C.
3	N.C.
4	D1 (A +)
5	D0 (B –)
6	N.C.
7	N.C.
8	Common

⚠ WARNING

UNINTENDED EQUIPMENT OPERATION

Do not connect wires to unused terminals and/or terminals indicated as “No Connection (N.C.)”.

Failure to follow these instructions can result in death, serious injury, or equipment damage.

Status LED

The following graphic show the status LED:

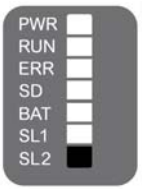

The table below describes the serial line 2 status LED:

Label	Description	LED		
		Color	Status	Description
SL2	Serial Line 2	Green	On	Indicates the activity of the serial line 2.
			Off	Indicates no serial communication.

Chapter 24
Connecting the M221 Logic Controller to a PC

Connecting the Controller to a PC

Overview

To transfer, run, and monitor the applications, connect the controller to a computer, that has SoMachine Basic 1.0 or later installed, using either a USB cable or an Ethernet connection (for those references that support an Ethernet port).

NOTICE
INOPERABLE EQUIPMENT Always connect the communication cable to the PC before connecting it to the controller. **Failure to follow these instructions can result in equipment damage.**

USB Mini-B Port Connection

TCSXCNAMUM3P: This USB cable is suitable for short duration connections such as quick updates or retrieving data values.

BMXXCAUSBH018: Grounded and shielded, this USB cable is suitable for long duration connections on a TM221C Logic Controller.

BMXXCAUSBH045: Grounded and shielded, this USB cable is suitable for long duration connections on a TM221M Logic Controller.

NOTE: You can only connect 1 controller or any other device associated with SoMachine Basic and its component to the PC at any one time.

⚠ **WARNING**
INSUFFICENT POWER FOR USB DOWNLOAD Do not use a USB cable longer than 3m (9.8 ft) for USB powered download. **Failure to follow these instructions can result in death, serious injury, or equipment damage.**

The USB Mini-B Port is the programming port you can use to connect a PC with a USB host port using SoMachine Basic software. Using a typical USB cable, this connection is suitable for quick updates of the program or short duration connections to perform maintenance and inspect data values. It is not suitable for long-term connections such as commissioning or monitoring without the use of specially adapted cables to help minimize electromagnetic interference.

⚠ WARNING

INOPERABLE EQUIPMENT OR UNINTENDED EQUIPMENT OPERATION

- You must use a shielded USB cable such as a BMX XCAUSBH0•• secured to the functional ground (FE) of the system for any long-term connection.
- Do not connect more than one controller at a time using USB connections.

Failure to follow these instructions can result in death, serious injury, or equipment damage.

The communication cable should be connected to the PC first to minimize the possibility of electrostatic discharge affecting the controller.

The following illustration shows the USB connection to a PC on a TM221C Logic Controller:

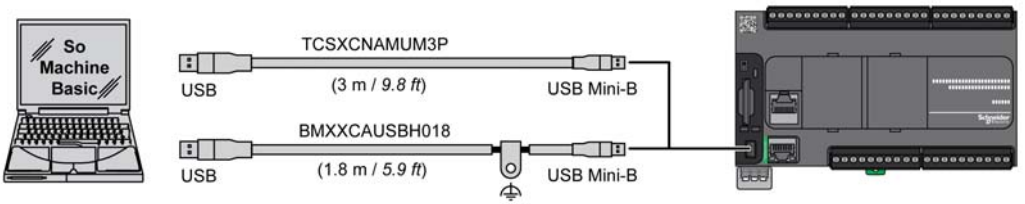

The following illustration shows the USB connection to a PC on a TM221M Logic Controller:

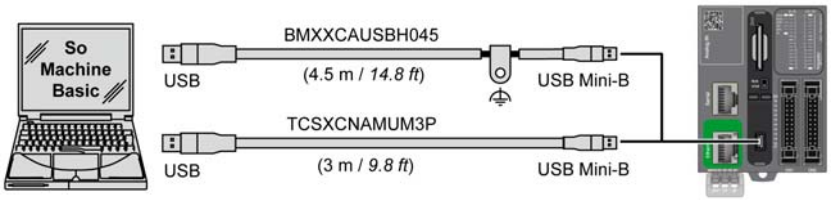

To connect the USB cable to your controller, follow the steps below:

Step	Action
1	**1a** If making a long-term connection using the cable BMXXCAUSBH045, or other cable with a ground shield connection, be sure to securely connect the shield connector to the functional ground (FE) or protective ground (PE) of your system before connecting the cable to your controller and your PC. **1b** If making a short-term connection using the cable TCSXCNAMUM3P or other non-grounded USB cable, proceed to step 2.
2	Connect your USB cable to the computer.
3	Open the hinged access cover.
4	Connect the Mini connector of your USB cable to the controller USB connector.

Ethernet Port Connection

You can also connect the controller to a PC using an Ethernet cable.

The following illustration shows the Ethernet connection to a PC on a TM221C Logic Controller:

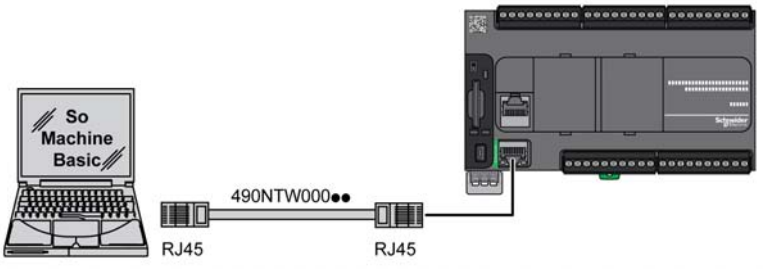

The following illustration shows the Ethernet connection to a PC on a TM221M Logic Controller:

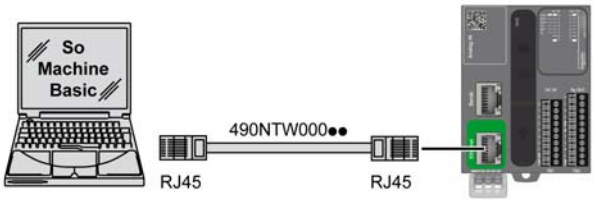

To connect the controller to the PC, do the following:

Step	Action
1	Connect your Ethernet cable to the PC.
2	Connect your Ethernet cable to the Ethernet port on the controller.

Glossary

A

analog input
Converts received voltage or current levels into numerical values. You can store and process these values within the logic controller.

analog output
Converts numerical values within the logic controller and sends out proportional voltage or current levels.

ASCII
(*American standard code for Information Interchange*) A protocol for representing alphanumeric characters (letters, numbers, certain graphics, and control characters).

B

bps
(*bit per second*) A definition of transmission rate, also given in conjunction with multiplicator kilo (kbps) and mega (mbps).

C

CTS
(*clear to send*) A data transmission signal and acknowledges the RDS signal from the transmitting station.

D

DIN
(*Deutsches Institut für Normung*) A German institution that sets engineering and dimensional standards.

E

EIA rack
(*electronic industries alliance rack*) A standardized (EIA 310-D, IEC 60297, and DIN 41494 SC48D) system for mounting various electronic modules in a stack or rack that is 19 inches (482.6 mm) wide.

EN

EN identifies 1 of many European standards maintained by CEN (*European Committee for Standardization*), CENELEC (*European Committee for Electrotechnical Standardization*), or ETSI (*European Telecommunications Standards Institute*).

F

FE

(functional Earth) A common grounding connection to enhance or otherwise allow normal operation of electrically sensitive equipment (also referred to as functional ground in North America).

In contrast to a protective Earth (protective ground), a functional earth connection serves a purpose other than shock protection, and may normally carry current. Examples of devices that use functional earth connections include surge suppressors and electromagnetic interference filters, certain antennas, and measurement instruments.

G

GRAFCET

The functioning of a sequential operation in a structured and graphic form.

This is an analytical method that divides any sequential control system into a series of steps, with which actions, transitions, and conditions are associated.

H

HE10

Rectangular connector for electrical signals with frequencies below 3 MHz, complying with IEC 60807-2.

I

IEC

(*international electrotechnical commission*) A non-profit and non-governmental international standards organization that prepares and publishes international standards for electrical, electronic, and related technologies.

IEC 61131-3

Part 3 of a 3-part IEC standard for industrial automation equipment. IEC 61131-3 is concerned with controller programming languages and defines 2 graphical and 2 textual programming language standards. The graphical programming languages are ladder diagram and function block diagram. The textual programming languages include structured text and instruction list.

IL

(*instruction list*) A program written in the language that is composed of a series of text-based instructions executed sequentially by the controller. Each instruction includes a line number, an instruction code, and an operand (refer to IEC 61131-3).

instruction list language

A program written in the instruction list language that is composed of a series of text-based instructions executed sequentially by the controller. Each instruction includes a line number, an instruction code, and an operand (see IEC 61131-3).

IP 20

(*ingress protection*) The protection classification according to IEC 60529 offered by an enclosure, shown by the letter IP and 2 digits. The first digit indicates 2 factors: helping protect persons and for equipment. The second digit indicates helping protect against water. IP 20 devices help protect against electric contact of objects larger than 12.5 mm, but not against water.

L

ladder diagram language

A graphical representation of the instructions of a controller program with symbols for contacts, coils, and blocks in a series of rungs executed sequentially by a controller (see IEC 61131-3).

LD

(*ladder diagram*) A graphical representation of the instructions of a controller program with symbols for contacts, coils, and blocks in a series of rungs executed sequentially by a controller (refer to IEC 61131-3).

M

Modbus

The protocol that allows communications between many devices connected to the same network.

N

NEMA

(*national electrical manufacturers association*) The standard for the performance of various classes of electrical enclosures. The NEMA standards cover corrosion resistance, ability to help protect from rain, submersion, and so on. For IEC member countries, the IEC 60529 standard classifies the ingress protection rating for enclosures.

P

PE

(*protective Earth*) A common grounding connection to help avoid the hazard of electric shock by keeping any exposed conductive surface of a device at earth potential. To avoid possible voltage drop, no current is allowed to flow in this conductor (also referred to as *protective ground* in North America or as an equipment grounding conductor in the US national electrical code).

R

RJ-45

A standard type of 8-pin connector for network cables defined for Ethernet.

RS-485

A standard type of serial communication bus, based on 2 wires (also known as EIA RS-485).

RTS

(*request to send*) A data transmission signal and CTS signal that acknowledges the RTS from the destination node.

RxD

The line that receives data from one source to another.

T

terminal block

(*terminal block*) The component that mounts in an electronic module and provides electrical connections between the controller and the field devices.

TxD

The line that sends data from one source to another.

Index

A

accessories, *41*
analog input modules
    specifications, *33*
analog mixed I/O modules
    specifications, *35*
analog output modules
    specifications, *35*

C

caution
    loss of application data, *62*
certifications and standards, *72*
Communication Ports, *327*
    Ethernet Port, *330*
    Serial Line 1, *333*
    Serial Line 2, *337*
    USB Programming Port, *328*

D

digital I/O modules
    specifications, *30*, *31*, *33*, *37*, *38*
Digital I/O modules
    Specifications, *38*

E

Electrical Requirements
    Installation, *91*
Electromagnetic Susceptibility, *70*

F

fallback
    configuring modes, *58*
features
    key features, *16*, *20*
Filter
    Bounce Filter, *55*

G

Grounding, *105*

I

inductive load, output protection
    output protection, inductive load, *96*
Input Management, *55*
Installation, *67*
    Electrical Requirements, *91*
    Logic Controller Installation, *73*

L

Latching, *55*
Logic Controller Installation
    Installation, *73*

M

M221
TM221C16R, *111*
TM221C16T, *119*
TM221C24R, *127*
TM221C24T, *135*
TM221C40R, *143*
TM221C40T, *155*
TM221CE16R, *115*
TM221CE16T, *123*
TM221CE24R, *131*
TM221CE24T, *139*
TM221CE40R, *149*
TM221CE40T, *161*
TM221M16R / TM221M16RG, *201*
TM221M16T, *237*
TM221M32TK, *277*
TM221ME16R / TM221ME16RG, *219*
TM221ME16T / TM221ME16TG, *257*
TM221ME32TK, *301*
M221 I/O
Environmental Characteristics, *69*
mounting positions, *77*, *80*

N

notice
loss of application data, *62*

O

output management, *57*

P

Power Supply, *98*, *102*
presentation
TM221M16R / TM221M16RG, *202*
TM221M16T / TM221M16TG, *238*
TM221M32TK, *278*
TM221ME16R / TM221ME16RG, *220*
TM221ME16T / TM221ME16TG, *258*
TM221ME32TK, *302*
programming languages
IL, LD, *20*
IL, LD, Grafcet, *16*

R

real time clock, *48*
regular inputs, *30*, *31*, *33*
regular transistor outputs, *30*, *31*, *33*
relay outputs, *30*, *31*, *33*
Run/Stop, *60*

S

SD Card, *62*
Serial Line 1
Communication Ports, *333*
Serial Line 2
Communication Ports, *337*
short-circuit or over-current on relay outputs, *58*
short-circuit or over-current on transistor outputs, *58*
specifications
analog input modules, *33*
analog mixed I/O modules, *35*
analog output modules, *35*
digital I/O modules, *30*, *31*, *33*, *37*
Specifications
Digital I/O modules, *38*, *38*
specifications
modules, *36*
transmitter and receiver modules, *36*

T

Tesys modules
specifications, *36*
TM221C16R, *111*, *111*
TM221C16T, *119*, *119*
TM221C24R, *127*
TM221C24T, *135*, *135*
TM221C40R, *143*, *143*
TM221C40T, *155*, *155*
TM221CE16R, *115*

TM221CE16T, *123*, *123*
TM221CE24R, *127*, *131*, *131*
TM221CE24T, *139*, *139*
TM221CE40R, *149*, *149*
TM221CE40T, *161*, *161*
TMC2, *28*
transmitter and receiver modules
    specifications, *36*

U

USB Programming Port
    Communication Ports, *328*

W

wiring, *92*