This document contains information on a new product. Specifications and information herein are subject to change without notice.

Appendix: IC Revision history of SSD1322 Specification

Version	Change Items	Effective Date
1.0	1. Changed to Advance Information 2. Revised the typo errors on commands BBh and BEh (Section 9) 3. Amended the default OSCFREQ[3:0] of command B3h from 1100b to 0101b (Section 9) 4. Updated the DC Characteristics table (Section 12) 5. Updated the AC Characteristics table (Section 13) 6. Revise Table 13-5 & Figure 13-4 (3 wire SPI)	23-Jul-08
1.1	1. Updated the ordering P/N from SSD1322Z to SSD1322Z2 (P.7) and corresponding information (Section 5) 2. Updated the application examples (P.55, 56) 3. Added SSD1322Z2 die tray information (Section 15.2)	10-Sep-08
1.2	1. Revise typo in Section 3 : No. of SPH from 4 to 5 (P.7) 2. Revise die thickness tolerance from ±25um to ±15um on Table 3-1 (P.7) & Fig 5-1(P.9) 3. Added +/- 0.05mm tolerance for Die Size (after sawing) and revise bump size typo in Section 5 (P.9) 4. Update Table 3-2: SSD1322Z2 Bump Die Pad Coordinates (p.10) 5. Update Power On sequence (P.30) 6. Updated P/N from SSD1322Z to SSD1322Z2 in Fig 10-6 &10-7 (P.41) 7. Revised a typo on the command description of command ABh (P.45) 8. Add alignment mark detail of SSD1322UR1 in Fig 15-1 (P.57) 9. Revised declaimer (P.60)	13-Jul-10

CONTENTS

1 GENERAL DESCRIPTION 7

2 FEATURES 7

3 ORDERING INFORMATION 7

4 BLOCK DIAGRAM 8

5 DIE PAD FLOOR PLAN 9

6 PIN ARRANGEMENT 13

6.1 SSD1322UR1 PIN ASSIGNMENT 13

7 PIN DESCRIPTIONS 15

8 FUNCTIONAL BLOCK DESCRIPTIONS 18

8.1 MCU INTERFACE 18
8.1.1 MCU Parallel 6800-series Interface 18
8.1.2 MCU Parallel 8080-series Interface 19
8.1.3 MCU Serial Interface (4-wire SPI) 20
8.1.4 MCU Serial Interface (3-wire SPI) 21
8.2 RESET CIRCUIT 22
8.3 GDDRAM 22
8.3.1 GDDRAM structure in Gray Scale mode 22
8.3.2 Data bus to RAM mapping 22
8.4 COMMAND DECODER 23
8.5 OSCILLATOR & TIMING GENERATOR 23
8.6 SEG/COM DRIVING BLOCK 24
8.7 SEG / COM DRIVER 25
8.8 GRAY SCALE DECODER 29
8.9 POWER ON AND OFF SEQUENCE 30
8.10 V_{DD} REGULATOR 31

9 COMMAND TABLE 32

10 COMMAND 37

10.1.1 Enable Gray Scale Table (00h) 37
10.1.2 Set Column Address (15h) 37
10.1.3 Write RAM Command (5Ch) 37
10.1.4 Read RAM Command (5Dh) 37
10.1.5 Set Row Address (75h) 38
10.1.6 Set Re-map & Dual COM Line Mode (A0h) 39
10.1.7 Set Display Start Line (A1h) 42
10.1.8 Set Display Offset (A2h) 43
10.1.9 Set Display Mode (A4h ~ A7h) 44
10.1.10 Enable Partial Display (A8h) 45
10.1.11 Exit Partial Display (A9h) 45
10.1.12 Set Function selection (ABh) 45
10.1.13 Set Display ON/OFF (AEh / AFh) 45
10.1.14 Set Phase Length (B1h) 45
10.1.15 Set Front Clock Divider / Oscillator Frequency (B3h) 45
10.1.16 Display Enhancement A (B4h) 46
10.1.17 Set GPIO (B5h) 46
10.1.18 Set Second Pre-charge period (B6h) 46
10.1.19 Set Gray Scale Table (B8h) 46
10.1.20 Select Default Linear Gray Scale Table (B9h) 46
10.1.21 Set Pre-charge voltage (BBh) 46
10.1.22 Set V_{COMH} Voltage (BEh) 47
10.1.23 Set Contrast Current (C1h) 47

10.1.24 Master Current Control (C7h).....47
10.1.25 Set Multiplex Ratio (CAh).....47
10.1.26 Display Enhancement B (D1h).....47
10.1.27 Set Command Lock (FDh).....47

11 MAXIMUM RATINGS..... 48

12 DC CHARACTERISTICS..... 49

13 AC CHARACTERISTICS..... 50

14 APPLICATION EXAMPLES..... 55

15 PACKAGE INFORMATION..... 57

15.1 SSD1322UR1 DETAIL DIMENSION.....57
15.2 SSD1322Z2 DIE TRAY INFORMATION.....58

TABLES

4. UPDATE TABLE 3-1: SSD1322Z2 BUMP DIE PAD COORDINATES (P.10)....II
4. UPDATE TABLE 3-2: SSD1322Z2 BUMP DIE PAD COORDINATES (P.10)....2
TABLE 3-1 : ORDERING INFORMATION 7
TABLE 5-1: SSD1322Z2 BUMP DIE PAD COORDINATES....10
TABLE 6-1: SSD1322UR1 PIN ASSIGNMENT TABLE 14
TABLE 7-1: SSD1322 PIN DESCRIPTION....15
TABLE 7-2 : BUS INTERFACE SELECTION 15
TABLE 8-1 : MCU INTERFACE ASSIGNMENT UNDER DIFFERENT BUS INTERFACE MODE 18
TABLE 8-2 : CONTROL PINS OF 6800 INTERFACE....18
TABLE 8-3 : CONTROL PINS OF 8080 INTERFACE....20
TABLE 8-4 : CONTROL PINS OF 4-WIRE SERIAL INTERFACE....20
TABLE 8-5: CONTROL PINS OF 3-WIRE SERIAL INTERFACE....21
TABLE 8-6 : GDDRAM IN GRAY SCALE MODE (RESET) 22
TABLE 8-7 : DATA BUS USAGE....22
TABLE 9-1 : COMMAND TABLE 32
TABLE 11-1 : MAXIMUM RATINGS 48
TABLE 12-1 : DC CHARACTERISTICS....49
TABLE 13-1 : AC CHARACTERISTICS....50
TABLE 13-2 : 6800-SERIES MCU PARALLEL INTERFACE TIMING CHARACTERISTICS....51
TABLE 13-3 : 8080-SERIES MCU PARALLEL INTERFACE TIMING CHARACTERISTICS....52
TABLE 13-4 : SERIAL INTERFACE TIMING CHARACTERISTICS (4-WIRE SPI) 53
TABLE 13-5: SERIAL INTERFACE TIMING CHARACTERISTICS (3-WIRE SPI)....54
TABLE 15-1: SSD1322Z2 DIE TRAY DIMENSIONS 59

FIGURES

FIGURE 4-1 : SSD1322 BLOCK DIAGRAM....8
FIGURE 5-1: SSD1322Z2 DIE DRAWING....9
FIGURE 5-2: SSD1322Z2 ALIGNMENT MARK DIMENSION....9
FIGURE 6-1: SSD1322UR1 PIN ASSIGNMENT....13
FIGURE 8-1 : DATA READ BACK PROCEDURE - INSERTION OF DUMMY READ....19
FIGURE 8-2 : EXAMPLE OF WRITE PROCEDURE IN 8080 PARALLEL INTERFACE MODE....19
FIGURE 8-3 : EXAMPLE OF READ PROCEDURE IN 8080 PARALLEL INTERFACE MODE....19
FIGURE 8-4 : DISPLAY DATA READ BACK PROCEDURE - INSERTION OF DUMMY READ....20
FIGURE 8-5 : WRITE PROCEDURE IN 4-WIRE SERIAL INTERFACE MODE....21
FIGURE 8-6: WRITE PROCEDURE IN 3-WIRE SERIAL INTERFACE MODE....21
FIGURE 8-7 : OSCILLATOR CIRCUIT....23
FIGURE 8-8 : I_{REF} CURRENT SETTING BY RESISTOR VALUE....24
FIGURE 8-9 : SEGMENT AND COMMON DRIVER BLOCK DIAGRAM – SINGLE COM MODE....25
FIGURE 8-10 : SEGMENT AND COMMON DRIVER BLOCK DIAGRAM – DUAL COM MODE....26
FIGURE 8-11 : SEGMENT AND COMMON DRIVER SIGNAL WAVEFORM....27
FIGURE 8-12 : GRAY SCALE CONTROL BY PWM IN SEGMENT....28
FIGURE 8-13 : RELATION BETWEEN GDDRAM CONTENT AND GRAY SCALE TABLE ENTRY (UNDER COMMAND B9H ENABLE LINEAR GRAY SCALE TABLE)....29
FIGURE 8-14 : THE POWER ON SEQUENCE....30
FIGURE 8-15 : THE POWER OFF SEQUENCE....30
FIGURE 8-16 V_{CI} > 2.6V, V_{DD} REGULATOR ENABLE PIN CONNECTION SCHEME....31
FIGURE 8-17 V_{DD} REGULATOR DISABLE PIN CONNECTION SCHEME....31
FIGURE 10-110-2 : EXAMPLE OF COLUMN AND ROW ADDRESS POINTER MOVEMENT (GRAY SCALE MODE)....38
FIGURE 10-3 : ADDRESS POINTER MOVEMENT OF HORIZONTAL ADDRESS INCREMENT MODE....39
FIGURE 10-4: ADDRESS POINTER MOVEMENT OF VERTICAL ADDRESS INCREMENT MODE....39
FIGURE 10-5: GDDRAM IN GRAY SCALE MODE WITH OR WITHOUT COLUMN ADDRESS (A[1]) & NIBBLE REMAPPING (A[2])....40
FIGURE 10-6 : COM PINS HARDWARE CONFIGURATION – 1 (MUX RATIO: 128)....41
FIGURE 10-7 : COM PINS HARDWARE CONFIGURATION – 2 (MUX RATIO: 64)....41
FIGURE 10-8 : EXAMPLE OF SET DISPLAY START LINE WITH NO REMAP....42
FIGURE 10-9 : EXAMPLE OF SET DISPLAY OFFSET WITH NO REMAP....43
FIGURE 10-10 : EXAMPLE OF NORMAL DISPLAY....44
FIGURE 10-11 : EXAMPLE OF ENTIRE DISPLAY ON....44
FIGURE 10-12 : EXAMPLE OF ENTIRE DISPLAY OFF....44
FIGURE 10-13 : EXAMPLE OF INVERSE DISPLAY....44
FIGURE 10-14 : EXAMPLE OF PARTIAL MODE DISPLAY....45
FIGURE 10-15 : EXAMPLE OF GAMMA CORRECTION BY GAMMA LOOK UP TABLE SETTING....46
FIGURE 13-1 : 6800-SERIES MCU PARALLEL INTERFACE CHARACTERISTICS....51
FIGURE 13-2 : 8080-SERIES MCU PARALLEL INTERFACE CHARACTERISTICS....52
FIGURE 13-3 : SERIAL INTERFACE CHARACTERISTICS (4-WIRE SPI)....53
FIGURE 13-4: SERIAL INTERFACE CHARACTERISTICS (3-WIRE SPI)....54
FIGURE 14-1 : SSD1322 APPLICATION EXAMPLE FOR 8-BIT 6800-PARALLEL INTERFACE MODE (INTERNAL REGULATED V_{DD})....55
FIGURE 14-2 : SSD1322 APPLICATION EXAMPLE FOR 8-BIT 6800-PARALLEL INTERFACE, DUAL COM MODE (INTERNAL V_{DD})....56
FIGURE 15-1: SSD1322UR1 DETAIL DIMENSION....57
FIGURE 15-2: SSD1322Z2 DIE TRAY DRAWING....58

1 GENERAL DESCRIPTION

SSD1322 is a single-chip CMOS OLED/PLED driver with controller for organic/polymer light emitting diode dot-matrix graphic display system. It consists of 480 segments and 128 commons. This IC is designed for Common Cathode type OLED/PLED panel.

SSD1322 displays data directly from its internal 480 x 128 x 4 bits Graphic Display Data RAM (GDDRAM). Data/Commands are sent from general MCU through the hardware selectable 6800-/8080-series compatible Parallel Interface or Serial Peripheral Interface. This driver IC has a 256 steps contrast control and can be widely used in many applications such as automotive and industrial control panel.

2 FEATURES

- Resolution: 480 x 128 dot matrix panel
- Power supply
  - V_{DD} = 2.4V – 2.6V (Core V_{DD} power supply, can be regulated from V_{CI})
  - V_{DDIO} = 1.65V – V_{CI} (MCU interface logic level)
  - V_{CI} = 2.4V - 3.5V (Low voltage power supply)
  - V_{CC} = 10.0V – 20.0V (Panel driving power supply)
- When V_{CI} is lower than 2.6V, V_{DD} should be supplied by external power source
- For matrix display
  - Segment maximum source current: 300uA
  - Common maximum sink current: 80mA
  - 256 step contrast brightness current control, 16 step master current control
- 16 gray scale levels supported by embedded 480 x 128 x 4 bit SRAM display buffer
- Selectable MCU Interfaces:
  - 8-bit 6800/8080-series parallel interface
  - 3/4-wire Serial Peripheral Interface
- Selectable Common current sinking mode:
  - Dual COM mode
  - Single COM mode
- 8-bit programmable Gray Scale Look Up Table
- High Power Protection
- Programmable Frame Rate and Multiplexing Ratio
- Row re-mapping and Column re-mapping
- Sleep mode current <10uA with ram data kept
- Operating temperature range -40°C to 85°C.

3 ORDERING INFORMATION

Table 3-1 : Ordering Information

Ordering Part Number	SEG	COM	Package Form	Reference	Remark
SSD1322Z2	480	128	Gold bump Die	Page 9	• Min SEG pitch: 25um • Min COM pitch: 35um • Die thickness: 300 +/- 15um
SSD1322UR1	256	64 (dual COM)	COF	Page 13, 57	• 70mm film, 5 SPH • 8-bit 80/68/SPI interfaces • SEG, COM lead pitch 0.12mm x 0.999 = 0.11988mm • Also support 128 MUX (single COM) • Die thickness: 457 +/- 25um

4 BLOCK DIAGRAM

Figure 4-1 : SSD1322 Block Diagram

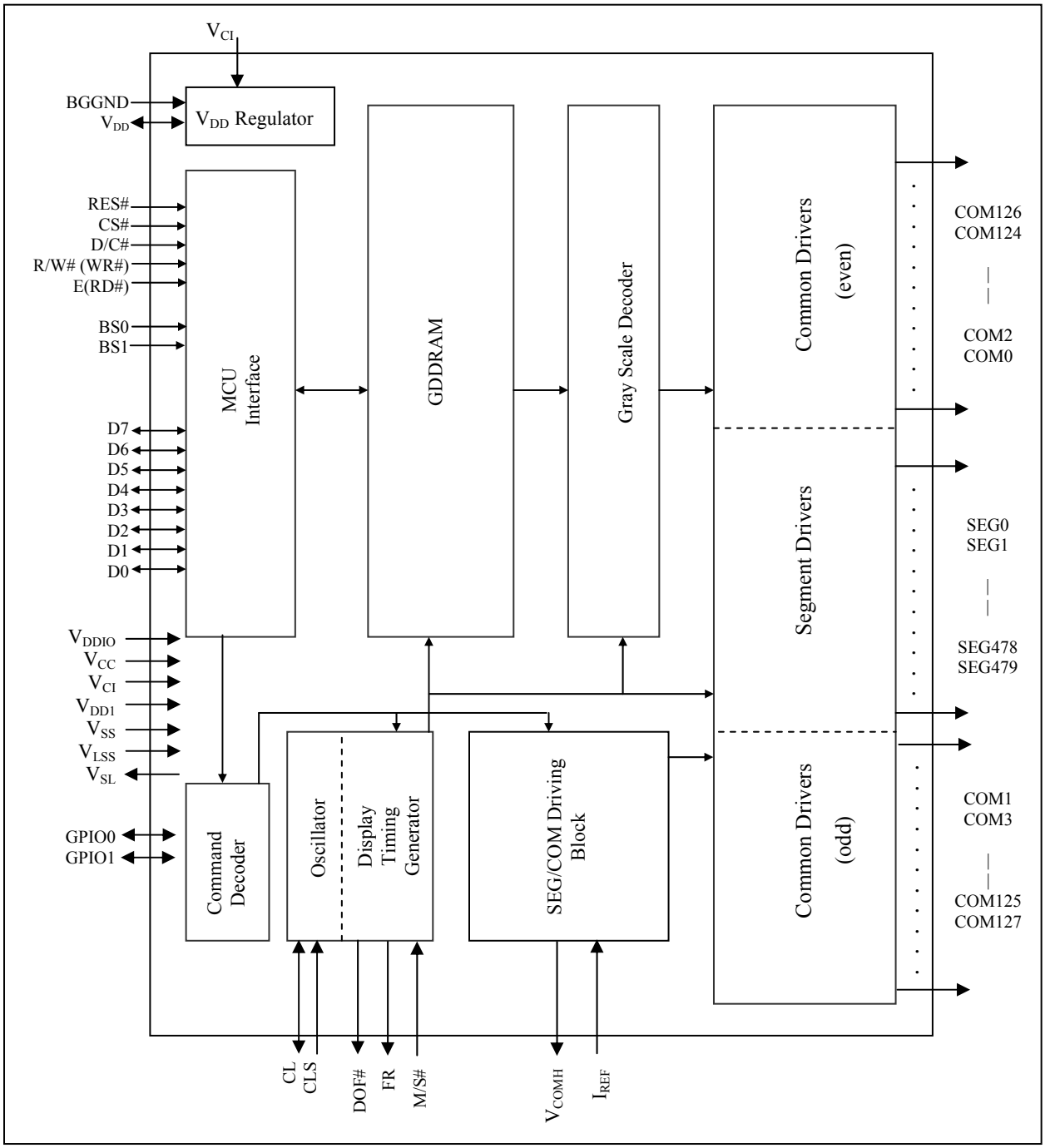

5 DIE PAD FLOOR PLAN

Figure 5-1: SSD1322Z2 Die Drawing

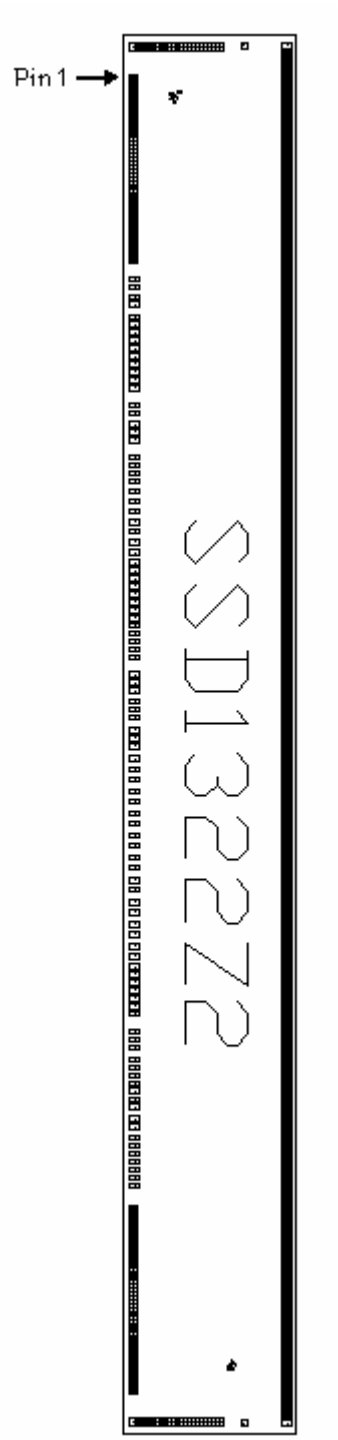

Die size	12.4 mm ± 0.05mm x 1.53 mm ± 0.05mm
Die thickness	300 +/- 15um
Min I/O pad pitch	70um
Min SEG pad pitch	25um
Min COM pad pitch	35um
Bump height	Nominal 15um

Bump size		
Pad#	X[um]	Y[um]
1-48, 146-193	26	60
195-216, 706-727	60	26
49-145	45	90
194, 728	60	50
217, 705	50	50
218, 704	50	96
219-703	16	96

Alignment mark	Position	Size
+ shape	(5583.95,200.78)	75um x 75um
+ shape	(-5634.61,-309.88)	75um x 75um
SSL Logo	(-5682.11,-258.98)	-

(For details dimension please see Figure 5-2)

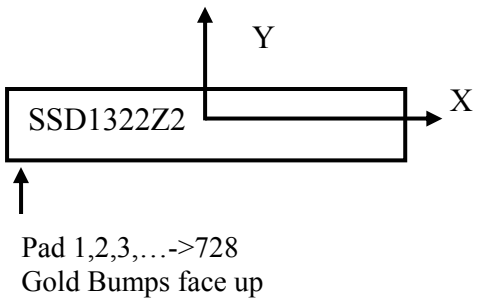

Figure 5-2: SSD1322Z2 alignment mark dimension

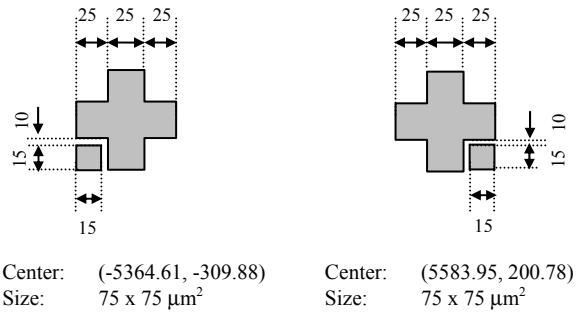

Table 5-1: SSD1322Z2 Bump Die Pad Coordinates

Pad no.	Pin name	X-pos	Y-pos
1	VLSS	-5833.06	-664.06
2	VLSS	-5798.06	-664.06
3	COM84	-5758.06	-664.06
4	COM85	-5723.06	-664.06
5	COM86	-5688.06	-664.06
6	COM87	-5653.06	-664.06
7	COM88	-5618.06	-664.06
8	COM89	-5583.06	-664.06
9	COM90	-5548.06	-664.06
10	COM91	-5513.06	-664.06
11	COM92	-5478.06	-664.06
12	COM93	-5443.06	-664.06
13	COM94	-5408.06	-664.06
14	COM95	-5373.06	-664.06
15	COM96	-5338.06	-664.06
16	COM97	-5303.06	-664.06
17	COM98	-5268.06	-664.06
18	COM99	-5233.06	-664.06
19	COM100	-5198.06	-664.06
20	COM101	-5163.06	-664.06
21	COM102	-5128.06	-664.06
22	COM103	-5093.06	-664.06
23	COM104	-5058.06	-664.06
24	COM105	-5023.06	-664.06
25	COM106	-4988.06	-664.06
26	COM107	-4953.06	-664.06
27	COM108	-4918.06	-664.06
28	COM109	-4883.06	-664.06
29	COM110	-4848.06	-664.06
30	COM111	-4813.06	-664.06
31	COM112	-4778.06	-664.06
32	COM113	-4743.06	-664.06
33	COM114	-4708.06	-664.06
34	COM115	-4673.06	-664.06
35	COM116	-4638.06	-664.06
36	COM117	-4603.06	-664.06
37	COM118	-4568.06	-664.06
38	COM119	-4533.06	-664.06
39	COM120	-4498.06	-664.06
40	COM121	-4463.06	-664.06
41	COM122	-4428.06	-664.06
42	COM123	-4393.06	-664.06
43	COM124	-4358.06	-664.06
44	COM125	-4323.06	-664.06
45	COM126	-4288.06	-664.06
46	COM127	-4253.06	-664.06
47	VLSS	-4218.06	-664.06
48	VLSS	-4183.06	-664.06
49	VSS	-4033.06	-654.15
50	VSS	-3963.06	-654.15
51	VCC	-3874.06	-654.15
52	VCC	-3804.06	-654.15
53	VCOMH	-3697.06	-654.15
54	VCOMH	-3627.06	-654.15
55	VLSS	-3557.06	-654.15
56	VLSS	-3487.06	-654.15
57	VSS	-3417.06	-654.15
58	VSS	-3347.06	-654.15
59	VSL	-3277.06	-654.15
60	VSL	-3207.06	-654.15
61	VCI	-3137.06	-654.15
62	VCI	-3067.06	-654.15
63	VDD1	-2914.06	-654.15
64	VDD1	-2844.06	-654.15
65	VDD	-2746.06	-654.15
66	VDD	-2676.06	-654.15
67	VDD	-2606.06	-654.15
68	VDDIO	-2453.06	-654.15
69	VDDIO	-2383.06	-654.15
70	VDD	-2313.06	-654.15
71	VLSS	-2243.06	-654.15
72	GPIO0	-2151.06	-654.15
73	GPIO1	-2065.06	-654.15
74	IREF	-1973.06	-654.15
75	FR	-1881.06	-654.15
76	CL	-1795.06	-654.15
77	VSS	-1703.06	-654.15
78	DOF#	-1611.06	-654.15
79	NC	-1521.06	-654.15
80	VSS	-1451.06	-654.15
81	RES#	-1381.06	-654.15
82	CS#	-1311.06	-654.15
83	D/C#	-1241.06	-654.15
84	VSS	-1171.06	-654.15
85	BS1	-1101.06	-654.15
86	VDDIO	-1031.06	-654.15
87	BS0	-961.06	-654.15
88	VSS	-891.06	-654.15
89	R/W#(WR#)	-821.06	-654.15
90	E(RD#)	-751.06	-654.15
91	VDDIO	-681.06	-654.15
92	VDD1	-528.06	-654.15
93	VDD1	-458.06	-654.15
94	VDD1	-388.06	-654.15
95	VDD	-290.06	-654.15
96	VDD	-220.06	-654.15
97	VDD	-150.06	-654.15
98	NC	-36.06	-654.15
99	NC	33.94	-654.15
100	NC	103.94	-654.15
101	VCI	217.94	-654.15
102	D0	309.94	-654.15
103	D1	395.94	-654.15
104	D2	505.94	-654.15
105	D3	591.94	-654.15
106	D4	701.94	-654.15
107	D5	787.94	-654.15
108	D6	897.94	-654.15
109	D7	983.94	-654.15
110	DN0	1093.94	-654.15
111	DN1	1179.94	-654.15
112	DN2	1289.94	-654.15
113	DN3	1375.94	-654.15
114	DN4	1485.94	-654.15
115	DN5	1571.94	-654.15
116	DN6	1681.94	-654.15
117	DN7	1767.94	-654.15
118	DN8	1877.94	-654.15
119	DN9	1963.94	-654.15
120	VSS	2055.94	-654.15
121	BGGND	2125.94	-654.15
122	MS	2195.94	-654.15
123	CLS	2265.94	-654.15
124	VSL	2335.94	-654.15
125	VSL	2405.94	-654.15
126	VCI	2475.94	-654.15
127	VDDIO	2628.94	-654.15
128	VDDIO	2698.94	-654.15
129	VDD	2768.94	-654.15
130	NC	2878.94	-654.15
131	VSS	2948.94	-654.15
132	VSS	3018.94	-654.15
133	VLSS	3088.94	-654.15
134	VLSS	3158.94	-654.15
135	VCOMH	3228.94	-654.15
136	VCOMH	3298.94	-654.15
137	VCC	3405.94	-654.15
138	VCC	3475.94	-654.15
139	VSS	3572.94	-654.15
140	VSS	3642.94	-654.15
141	VSS	3712.94	-654.15
142	VSS	3782.94	-654.15
143	VSS	3852.94	-654.15
144	VSS	3922.94	-654.15
145	VSS	3992.94	-654.15
146	VLSS	4183.06	-664.06
147	VLSS	4218.06	-664.06
148	COM63	4253.06	-664.06
149	COM62	4288.06	-664.06
150	COM61	4323.06	-664.06
151	COM60	4358.06	-664.06
152	COM59	4393.06	-664.06
153	COM58	4428.06	-664.06
154	COM57	4463.06	-664.06
155	COM56	4498.06	-664.06
156	COM55	4533.06	-664.06
157	COM54	4568.06	-664.06
158	COM53	4603.06	-664.06
159	COM52	4638.06	-664.06
160	COM51	4673.06	-664.06
161	COM50	4708.06	-664.06
162	COM49	4743.06	-664.06
163	COM48	4778.06	-664.06
164	COM47	4813.06	-664.06
165	COM46	4848.06	-664.06
166	COM45	4883.06	-664.06
167	COM44	4918.06	-664.06
168	COM43	4953.06	-664.06
169	COM42	4988.06	-664.06
170	COM41	5023.06	-664.06
171	COM40	5058.06	-664.06
172	COM39	5093.06	-664.06
173	COM38	5128.06	-664.06
174	COM37	5163.06	-664.06
175	COM36	5198.06	-664.06
176	COM35	5233.06	-664.06
177	COM34	5268.06	-664.06
178	COM33	5303.06	-664.06
179	COM32	5338.06	-664.06
180	COM31	5373.06	-664.06
181	COM30	5408.06	-664.06
182	COM29	5443.06	-664.06
183	COM28	5478.06	-664.06
184	COM27	5513.06	-664.06
185	COM26	5548.06	-664.06
186	COM25	5583.06	-664.06
187	COM24	5618.06	-664.06
188	COM23	5653.06	-664.06
189	COM22	5688.06	-664.06
190	COM21	5723.06	-664.06
191	COM20	5758.06	-664.06
192	VLSS	5793.06	-664.06
193	VLSS	5828.06	-664.06
194	VLSS	6087.34	-674.56
195	COM19	6087.34	-627.06
196	COM18	6087.34	-592.06
197	COM17	6087.34	-557.06
198	COM16	6087.34	-522.06
199	COM15	6087.34	-487.06
200	COM14	6087.34	-452.06
201	COM13	6087.34	-417.06
202	COM12	6087.34	-382.06
203	COM11	6087.34	-347.06
204	COM10	6087.34	-312.06
205	COM9	6087.34	-277.06
206	COM8	6087.34	-242.06
207	COM7	6087.34	-207.06
208	COM6	6087.34	-172.06
209	COM5	6087.34	-137.06
210	COM4	6087.34	-102.06
211	COM3	6087.34	-67.06
212	COM2	6087.34	-32.06
213	COM1	6087.34	2.94
214	COM0	6087.34	37.94
215	VLSS	6087.34	72.94
216	VLSS	6087.34	107.94
217	VSL	6097.34	311.09
218	VCC	6097.34	687.81
219	SEG0	6050	687.81
220	SEG1	6025	687.81
221	SEG2	6000	687.81
222	SEG3	5975	687.81
223	SEG4	5950	687.81
224	SEG5	5925	687.81
225	SEG6	5900	687.81
226	SEG7	5875	687.81
227	SEG8	5850	687.81
228	SEG9	5825	687.81
229	SEG10	5800	687.81
230	SEG11	5775	687.81
231	SEG12	5750	687.81
232	SEG13	5725	687.81
233	SEG14	5700	687.81
234	SEG15	5675	687.81
235	SEG16	5650	687.81
236	SEG17	5625	687.81
237	SEG18	5600	687.81
238	SEG19	5575	687.81
239	SEG20	5550	687.81
240	SEG21	5525	687.81
241	SEG22	5500	687.81
242	SEG23	5475	687.81
243	SEG24	5450	687.81
244	SEG25	5425	687.81
245	SEG26	5400	687.81
246	SEG27	5375	687.81
247	SEG28	5350	687.81
248	SEG29	5325	687.81
249	SEG30	5300	687.81
250	SEG31	5275	687.81
251	SEG32	5250	687.81
252	SEG33	5225	687.81
253	SEG34	5200	687.81
254	SEG35	5175	687.81
255	SEG36	5150	687.81
256	SEG37	5125	687.81
257	SEG38	5100	687.81
258	SEG39	5075	687.81
259	SEG40	5050	687.81
260	SEG41	5025	687.81
261	SEG42	5000	687.81
262	SEG43	4975	687.81
263	SEG44	4950	687.81
264	SEG45	4925	687.81
265	SEG46	4900	687.81
266	SEG47	4875	687.81
267	SEG48	4850	687.81
268	SEG49	4825	687.81
269	SEG50	4800	687.81
270	SEG51	4775	687.81
271	SEG52	4750	687.81
272	SEG53	4725	687.81
273	SEG54	4700	687.81
274	SEG55	4675	687.81
275	SEG56	4650	687.81
276	SEG57	4625	687.81
277	SEG58	4600	687.81
278	SEG59	4575	687.81
279	SEG60	4550	687.81
280	SEG61	4525	687.81
281	SEG62	4500	687.81
282	SEG63	4475	687.81
283	SEG64	4450	687.81
284	SEG65	4425	687.81
285	SEG66	4400	687.81
286	SEG67	4375	687.81
287	SEG68	4350	687.81
288	SEG69	4325	687.81
289	SEG70	4300	687.81
290	SEG71	4275	687.81
291	SEG72	4250	687.81
292	SEG73	4225	687.81
293	SEG74	4200	687.81
294	SEG75	4175	687.81
295	SEG76	4150	687.81
296	SEG77	4125	687.81
297	SEG78	4100	687.81
298	SEG79	4075	687.81
299	SEG80	4050	687.81
300	SEG81	4025	687.81
301	SEG82	4000	687.81
302	SEG83	3975	687.81
303	SEG84	3950	687.81
304	SEG85	3925	687.81
305	SEG86	3900	687.81
306	SEG87	3875	687.81
307	SEG88	3850	687.81
308	SEG89	3825	687.81
309	SEG90	3800	687.81
310	SEG91	3775	687.81
311	SEG92	3750	687.81
312	SEG93	3725	687.81
313	SEG94	3700	687.81
314	SEG95	3675	687.81
315	SEG96	3650	687.81
316	SEG97	3625	687.81
317	SEG98	3600	687.81
318	SEG99	3575	687.81
319	SEG100	3550	687.81
320	SEG101	3525	687.81

Pad no.	Pin name	X-pos	Y-pos
321	SEG102	3500	687.81
322	SEG103	3475	687.81
323	SEG104	3450	687.81
324	SEG105	3425	687.81
325	SEG106	3400	687.81
326	SEG107	3375	687.81
327	SEG108	3350	687.81
328	SEG109	3325	687.81
329	SEG110	3300	687.81
330	SEG111	3275	687.81
331	SEG112	3250	687.81
332	SEG113	3225	687.81
333	SEG114	3200	687.81
334	SEG115	3175	687.81
335	SEG116	3150	687.81
336	SEG117	3125	687.81
337	SEG118	3100	687.81
338	SEG119	3075	687.81
339	SEG120	3050	687.81
340	SEG121	3025	687.81
341	SEG122	3000	687.81
342	SEG123	2975	687.81
343	SEG124	2950	687.81
344	SEG125	2925	687.81
345	SEG126	2900	687.81
346	SEG127	2875	687.81
347	SEG128	2850	687.81
348	SEG129	2825	687.81
349	SEG130	2800	687.81
350	SEG131	2775	687.81
351	SEG132	2750	687.81
352	SEG133	2725	687.81
353	SEG134	2700	687.81
354	SEG135	2675	687.81
355	SEG136	2650	687.81
356	SEG137	2625	687.81
357	SEG138	2600	687.81
358	SEG139	2575	687.81
359	SEG140	2550	687.81
360	SEG141	2525	687.81
361	SEG142	2500	687.81
362	SEG143	2475	687.81
363	SEG144	2450	687.81
364	SEG145	2425	687.81
365	SEG146	2400	687.81
366	SEG147	2375	687.81
367	SEG148	2350	687.81
368	SEG149	2325	687.81
369	SEG150	2300	687.81
370	SEG151	2275	687.81
371	SEG152	2250	687.81
372	SEG153	2225	687.81
373	SEG154	2200	687.81
374	SEG155	2175	687.81
375	SEG156	2150	687.81
376	SEG157	2125	687.81
377	SEG158	2100	687.81
378	SEG159	2075	687.81
379	SEG160	2050	687.81
380	SEG161	2025	687.81
381	SEG162	2000	687.81
382	SEG163	1975	687.81
383	SEG164	1950	687.81
384	SEG165	1925	687.81
385	SEG166	1900	687.81
386	SEG167	1875	687.81
387	SEG168	1850	687.81
388	SEG169	1825	687.81
389	SEG170	1800	687.81
390	SEG171	1775	687.81
391	SEG172	1750	687.81
392	SEG173	1725	687.81
393	SEG174	1700	687.81
394	SEG175	1675	687.81
395	SEG176	1650	687.81
396	SEG177	1625	687.81
397	SEG178	1600	687.81
398	SEG179	1575	687.81
399	SEG180	1550	687.81
400	SEG181	1525	687.81

Pad no.	Pin name	X-pos	Y-pos
401	SEG182	1500	687.81
402	SEG183	1475	687.81
403	SEG184	1450	687.81
404	SEG185	1425	687.81
405	SEG186	1400	687.81
406	SEG187	1375	687.81
407	SEG188	1350	687.81
408	SEG189	1325	687.81
409	SEG190	1300	687.81
410	SEG191	1275	687.81
411	SEG192	1250	687.81
412	SEG193	1225	687.81
413	SEG194	1200	687.81
414	SEG195	1175	687.81
415	SEG196	1150	687.81
416	SEG197	1125	687.81
417	SEG198	1100	687.81
418	SEG199	1075	687.81
419	SEG200	1050	687.81
420	SEG201	1025	687.81
421	SEG202	1000	687.81
422	SEG203	975	687.81
423	SEG204	950	687.81
424	SEG205	925	687.81
425	SEG206	900	687.81
426	SEG207	875	687.81
427	SEG208	850	687.81
428	SEG209	825	687.81
429	SEG210	800	687.81
430	SEG211	775	687.81
431	SEG212	750	687.81
432	SEG213	725	687.81
433	SEG214	700	687.81
434	SEG215	675	687.81
435	SEG216	650	687.81
436	SEG217	625	687.81
437	SEG218	600	687.81
438	SEG219	575	687.81
439	SEG220	550	687.81
440	SEG221	525	687.81
441	SEG222	500	687.81
442	SEG223	475	687.81
443	SEG224	450	687.81
444	SEG225	425	687.81
445	SEG226	400	687.81
446	SEG227	375	687.81
447	SEG228	350	687.81
448	SEG229	325	687.81
449	SEG230	300	687.81
450	SEG231	275	687.81
451	SEG232	250	687.81
452	SEG233	225	687.81
453	SEG234	200	687.81
454	SEG235	175	687.81
455	SEG236	150	687.81
456	SEG237	125	687.81
457	SEG238	100	687.81
458	SEG239	75	687.81
459	VCC	50	687.81
460	VCC	25	687.81
461	VCC	0	687.81
462	VCC	-25	687.81
463	VCC	-50	687.81
464	SEG240	-75	687.81
465	SEG241	-100	687.81
466	SEG242	-125	687.81
467	SEG243	-150	687.81
468	SEG244	-175	687.81
469	SEG245	-200	687.81
470	SEG246	-225	687.81
471	SEG247	-250	687.81
472	SEG248	-275	687.81
473	SEG249	-300	687.81
474	SEG250	-325	687.81
475	SEG251	-350	687.81
476	SEG252	-375	687.81
477	SEG253	-400	687.81
478	SEG254	-425	687.81
479	SEG255	-450	687.81
480	SEG256	-475	687.81

Pad no.	Pin name	X-pos	Y-pos
481	SEG257	-500	687.81
482	SEG258	-525	687.81
483	SEG259	-550	687.81
484	SEG260	-575	687.81
485	SEG261	-600	687.81
486	SEG262	-625	687.81
487	SEG263	-650	687.81
488	SEG264	-675	687.81
489	SEG265	-700	687.81
490	SEG266	-725	687.81
491	SEG267	-750	687.81
492	SEG268	-775	687.81
493	SEG269	-800	687.81
494	SEG270	-825	687.81
495	SEG271	-850	687.81
496	SEG272	-875	687.81
497	SEG273	-900	687.81
498	SEG274	-925	687.81
499	SEG275	-950	687.81
500	SEG276	-975	687.81
501	SEG277	-1000	687.81
502	SEG278	-1025	687.81
503	SEG279	-1050	687.81
504	SEG280	-1075	687.81
505	SEG281	-1100	687.81
506	SEG282	-1125	687.81
507	SEG283	-1150	687.81
508	SEG284	-1175	687.81
509	SEG285	-1200	687.81
510	SEG286	-1225	687.81
511	SEG287	-1250	687.81
512	SEG288	-1275	687.81
513	SEG289	-1300	687.81
514	SEG290	-1325	687.81
515	SEG291	-1350	687.81
516	SEG292	-1375	687.81
517	SEG293	-1400	687.81
518	SEG294	-1425	687.81
519	SEG295	-1450	687.81
520	SEG296	-1475	687.81
521	SEG297	-1500	687.81
522	SEG298	-1525	687.81
523	SEG299	-1550	687.81
524	SEG300	-1575	687.81
525	SEG301	-1600	687.81
526	SEG302	-1625	687.81
527	SEG303	-1650	687.81
528	SEG304	-1675	687.81
529	SEG305	-1700	687.81
530	SEG306	-1725	687.81
531	SEG307	-1750	687.81
532	SEG308	-1775	687.81
533	SEG309	-1800	687.81
534	SEG310	-1825	687.81
535	SEG311	-1850	687.81
536	SEG312	-1875	687.81
537	SEG313	-1900	687.81
538	SEG314	-1925	687.81
539	SEG315	-1950	687.81
540	SEG316	-1975	687.81
541	SEG317	-2000	687.81
542	SEG318	-2025	687.81
543	SEG319	-2050	687.81
544	SEG320	-2075	687.81
545	SEG321	-2100	687.81
546	SEG322	-2125	687.81
547	SEG323	-2150	687.81
548	SEG324	-2175	687.81
549	SEG325	-2200	687.81
550	SEG326	-2225	687.81
551	SEG327	-2250	687.81
552	SEG328	-2275	687.81
553	SEG329	-2300	687.81
554	SEG330	-2325	687.81
555	SEG331	-2350	687.81
556	SEG332	-2375	687.81
557	SEG333	-2400	687.81
558	SEG334	-2425	687.81
559	SEG335	-2450	687.81
560	SEG336	-2475	687.81

Pad no.	Pin name	X-pos	Y-pos
561	SEG337	-2500	687.81
562	SEG338	-2525	687.81
563	SEG339	-2550	687.81
564	SEG340	-2575	687.81
565	SEG341	-2600	687.81
566	SEG342	-2625	687.81
567	SEG343	-2650	687.81
568	SEG344	-2675	687.81
569	SEG345	-2700	687.81
570	SEG346	-2725	687.81
571	SEG347	-2750	687.81
572	SEG348	-2775	687.81
573	SEG349	-2800	687.81
574	SEG350	-2825	687.81
575	SEG351	-2850	687.81
576	SEG352	-2875	687.81
577	SEG353	-2900	687.81
578	SEG354	-2925	687.81
579	SEG355	-2950	687.81
580	SEG356	-2975	687.81
581	SEG357	-3000	687.81
582	SEG358	-3025	687.81
583	SEG359	-3050	687.81
584	SEG360	-3075	687.81
585	SEG361	-3100	687.81
586	SEG362	-3125	687.81
587	SEG363	-3150	687.81
588	SEG364	-3175	687.81
589	SEG365	-3200	687.81
590	SEG366	-3225	687.81
591	SEG367	-3250	687.81
592	SEG368	-3275	687.81
593	SEG369	-3300	687.81
594	SEG370	-3325	687.81
595	SEG371	-3350	687.81
596	SEG372	-3375	687.81
597	SEG373	-3400	687.81
598	SEG374	-3425	687.81
599	SEG375	-3450	687.81
600	SEG376	-3475	687.81
601	SEG377	-3500	687.81
602	SEG378	-3525	687.81
603	SEG379	-3550	687.81
604	SEG380	-3575	687.81
605	SEG381	-3600	687.81
606	SEG382	-3625	687.81
607	SEG383	-3650	687.81
608	SEG384	-3675	687.81
609	SEG385	-3700	687.81
610	SEG386	-3725	687.81
611	SEG387	-3750	687.81
612	SEG388	-3775	687.81
613	SEG389	-3800	687.81
614	SEG390	-3825	687.81
615	SEG391	-3850	687.81
616	SEG392	-3875	687.81
617	SEG393	-3900	687.81
618	SEG394	-3925	687.81
619	SEG395	-3950	687.81
620	SEG396	-3975	687.81
621	SEG397	-4000	687.81
622	SEG398	-4025	687.81
623	SEG399	-4050	687.81
624	SEG400	-4075	687.81
625	SEG401	-4100	687.81
626	SEG402	-4125	687.81
627	SEG403	-4150	687.81
628	SEG404	-4175	687.81
629	SEG405	-4200	687.81
630	SEG406	-4225	687.81
631	SEG407	-4250	687.81
632	SEG408	-4275	687.81
633	SEG409	-4300	687.81
634	SEG410	-4325	687.81
635	SEG411	-4350	687.81
636	SEG412	-4375	687.81
637	SEG413	-4400	687.81
638	SEG414	-4425	687.81
639	SEG415	-4450	687.81
640	SEG416	-4475	687.81

Pad no.	Pin name	X-pos	Y-pos
641	SEG417	-4500	687.81
642	SEG418	-4525	687.81
643	SEG419	-4550	687.81
644	SEG420	-4575	687.81
645	SEG421	-4600	687.81
646	SEG422	-4625	687.81
647	SEG423	-4650	687.81
648	SEG424	-4675	687.81
649	SEG425	-4700	687.81
650	SEG426	-4725	687.81
651	SEG427	-4750	687.81
652	SEG428	-4775	687.81
653	SEG429	-4800	687.81
654	SEG430	-4825	687.81
655	SEG431	-4850	687.81
656	SEG432	-4875	687.81
657	SEG433	-4900	687.81
658	SEG434	-4925	687.81
659	SEG435	-4950	687.81
660	SEG436	-4975	687.81
661	SEG437	-5000	687.81
662	SEG438	-5025	687.81
663	SEG439	-5050	687.81
664	SEG440	-5075	687.81
665	SEG441	-5100	687.81
666	SEG442	-5125	687.81
667	SEG443	-5150	687.81
668	SEG444	-5175	687.81
669	SEG445	-5200	687.81
670	SEG446	-5225	687.81
671	SEG447	-5250	687.81
672	SEG448	-5275	687.81
673	SEG449	-5300	687.81
674	SEG450	-5325	687.81
675	SEG451	-5350	687.81
676	SEG452	-5375	687.81
677	SEG453	-5400	687.81
678	SEG454	-5425	687.81
679	SEG455	-5450	687.81
680	SEG456	-5475	687.81
681	SEG457	-5500	687.81
682	SEG458	-5525	687.81
683	SEG459	-5550	687.81
684	SEG460	-5575	687.81
685	SEG461	-5600	687.81
686	SEG462	-5625	687.81
687	SEG463	-5650	687.81
688	SEG464	-5675	687.81
689	SEG465	-5700	687.81
690	SEG466	-5725	687.81
691	SEG467	-5750	687.81
692	SEG468	-5775	687.81
693	SEG469	-5800	687.81
694	SEG470	-5825	687.81
695	SEG471	-5850	687.81
696	SEG472	-5875	687.81
697	SEG473	-5900	687.81
698	SEG474	-5925	687.81
699	SEG475	-5950	687.81
700	SEG476	-5975	687.81
701	SEG477	-6000	687.81
702	SEG478	-6025	687.81
703	SEG479	-6050	687.81
704	VCC	-6097.34	687.81
705	VSL	-6097.34	311.09
706	VLSS	-6087.34	107.94
707	VLSS	-6087.34	72.94
708	COM64	-6087.34	37.94
709	COM65	-6087.34	2.94
710	COM66	-6087.34	-32.06
711	COM67	-6087.34	-67.06
712	COM68	-6087.34	-102.06
713	COM69	-6087.34	-137.06
714	COM70	-6087.34	-172.06
715	COM71	-6087.34	-207.06
716	COM72	-6087.34	-242.06
717	COM73	-6087.34	-277.06
718	COM74	-6087.34	-312.06
719	COM75	-6087.34	-347.06
720	COM76	-6087.34	-382.06

Pad no.	Pin name	X-pos	Y-pos
721	COM77	-6087.34	-417.06
722	COM78	-6087.34	-452.06
723	COM79	-6087.34	-487.06
724	COM80	-6087.34	-522.06
725	COM81	-6087.34	-557.06
726	COM82	-6087.34	-592.06
727	COM83	-6087.34	-627.06
728	VLSS	-6087.34	-674.56

6 PIN ARRANGEMENT

6.1 SSD1322UR1 pin assignment

Figure 6-1: SSD1322UR1 Pin Assignment

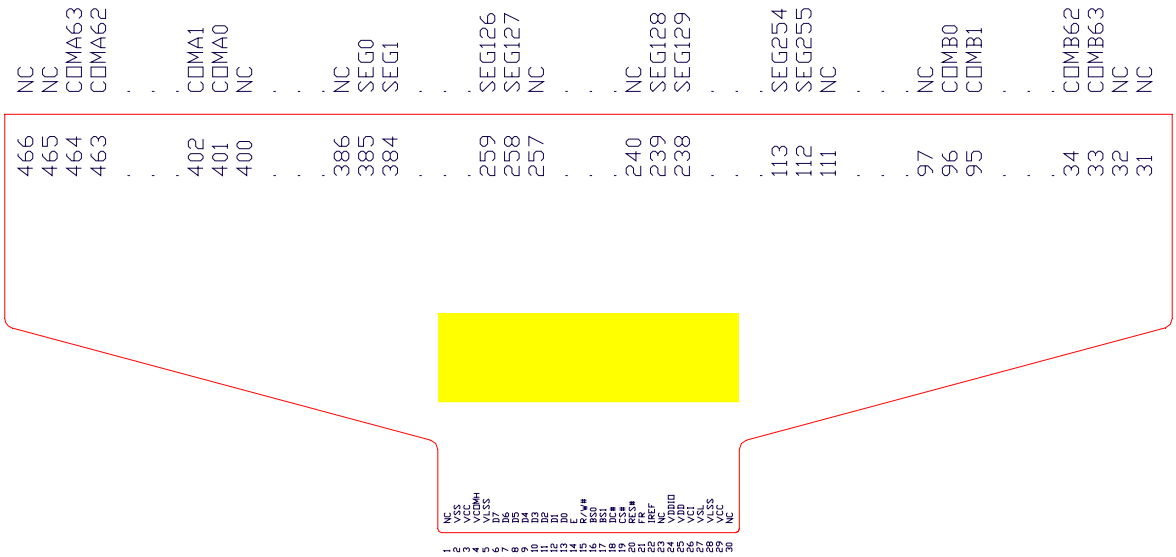

Note:
(1) COM sequence is listed in terms of dual COM mode; refer to Table 9-1 for details.

Table 6-1: SSD1322UR1 Pin Assignment Table

Pad no.	Pin name
1	NC
2	VSS
3	VCC
4	VCOMH
5	VLSS
6	D7
7	D6
8	D5
9	D4
10	D3
11	D2
12	D1
13	D0
14	E/RD#
15	RW#
16	BS0
17	BS1
18	DC#
19	CS#
20	RES#
21	FR
22	IREF
23	NC
24	VDDIO
25	VDD
26	VCI
27	VSL
28	VLSS
29	VCC
30	NC
31	NC
32	NC
33	COMB63
34	COMB62
35	COMB61
36	COMB60
37	COMB59
38	COMB58
39	COMB57
40	COMB56
41	COMB55
42	COMB54
43	COMB53
44	COMB52
45	COMB51
46	COMB50
47	COMB49
48	COMB48
49	COMB47
50	COMB46
51	COMB45
52	COMB44
53	COMB43
54	COMB42
55	COMB41
56	COMB40
57	COMB39
58	COMB38
59	COMB37
60	COMB36
61	COMB35
62	COMB34
63	COMB33
64	COMB32
65	COMB31
66	COMB30
67	COMB29
68	COMB28
69	COMB27
70	COMB26
71	COMB25
72	COMB24
73	COMB23
74	COMB22
75	COMB21
76	COMB20
77	COMB19
78	COMB18
79	COMB17
80	COMB16

Pad no.	Pin name
81	COMB15
82	COMB14
83	COMB13
84	COMB12
85	COMB11
86	COMB10
87	COMB9
88	COMB8
89	COMB7
90	COMB6
91	COMB5
92	COMB4
93	COMB3
94	COMB2
95	COMB1
96	COMB0
97	NC
98	NC
99	NC
100	NC
101	NC
102	NC
103	NC
104	NC
105	NC
106	NC
107	NC
108	NC
109	NC
110	NC
111	NC
112	SEG255
113	SEG254
114	SEG253
115	SEG252
116	SEG251
117	SEG250
118	SEG249
119	SEG248
120	SEG247
121	SEG246
122	SEG245
123	SEG244
124	SEG243
125	SEG242
126	SEG241
127	SEG240
128	SEG239
129	SEG238
130	SEG237
131	SEG236
132	SEG235
133	SEG234
134	SEG233
135	SEG232
136	SEG231
137	SEG230
138	SEG229
139	SEG228
140	SEG227
141	SEG226
142	SEG225
143	SEG224
144	SEG223
145	SEG222
146	SEG221
147	SEG220
148	SEG219
149	SEG218
150	SEG217
151	SEG216
152	SEG215
153	SEG214
154	SEG213
155	SEG212
156	SEG211
157	SEG210
158	SEG209
159	SEG208
160	SEG207

Pad no.	Pin name
161	SEG206
162	SEG205
163	SEG204
164	SEG203
165	SEG202
166	SEG201
167	SEG200
168	SEG199
169	SEG198
170	SEG197
171	SEG196
172	SEG195
173	SEG194
174	SEG193
175	SEG192
176	SEG191
177	SEG190
178	SEG189
179	SEG188
180	SEG187
181	SEG186
182	SEG185
183	SEG184
184	SEG183
185	SEG182
186	SEG181
187	SEG180
188	SEG179
189	SEG178
190	SEG177
191	SEG176
192	SEG175
193	SEG174
194	SEG173
195	SEG172
196	SEG171
197	SEG170
198	SEG169
199	SEG168
200	SEG167
201	SEG166
202	SEG165
203	SEG164
204	SEG163
205	SEG162
206	SEG161
207	SEG160
208	SEG159
209	SEG158
210	SEG157
211	SEG156
212	SEG155
213	SEG154
214	SEG153
215	SEG152
216	SEG151
217	SEG150
218	SEG149
219	SEG148
220	SEG147
221	SEG146
222	SEG145
223	SEG144
224	SEG143
225	SEG142
226	SEG141
227	SEG140
228	SEG139
229	SEG138
230	SEG137
231	SEG136
232	SEG135
233	SEG134
234	SEG133
235	SEG132
236	SEG131
237	SEG130
238	SEG129
239	SEG128
240	NC

Pad no.	Pin name
241	NC
242	NC
243	NC
244	NC
245	NC
246	NC
247	NC
248	NC
249	NC
250	NC
251	NC
252	NC
253	NC
254	NC
255	NC
256	NC
257	NC
258	SEG127
259	SEG126
260	SEG125
261	SEG124
262	SEG123
263	SEG122
264	SEG121
265	SEG120
266	SEG119
267	SEG118
268	SEG117
269	SEG116
270	SEG115
271	SEG114
272	SEG113
273	SEG112
274	SEG111
275	SEG110
276	SEG109
277	SEG108
278	SEG107
279	SEG106
280	SEG105
281	SEG104
282	SEG103
283	SEG102
284	SEG101
285	SEG100
286	SEG99
287	SEG98
288	SEG97
289	SEG96
290	SEG95
291	SEG94
292	SEG93
293	SEG92
294	SEG91
295	SEG90
296	SEG89
297	SEG88
298	SEG87
299	SEG86
300	SEG85
301	SEG84
302	SEG83
303	SEG82
304	SEG81
305	SEG80
306	SEG79
307	SEG78
308	SEG77
309	SEG76
310	SEG75
311	SEG74
312	SEG73
313	SEG72
314	SEG71
315	SEG70
316	SEG69
317	SEG68
318	SEG67
319	SEG66
320	SEG65

Pad no.	Pin name
321	SEG64
322	SEG63
323	SEG62
324	SEG61
325	SEG60
326	SEG59
327	SEG58
328	SEG57
329	SEG56
330	SEG55
331	SEG54
332	SEG53
333	SEG52
334	SEG51
335	SEG50
336	SEG49
337	SEG48
338	SEG47
339	SEG46
340	SEG45
341	SEG44
342	SEG43
343	SEG42
344	SEG41
345	SEG40
346	SEG39
347	SEG38
348	SEG37
349	SEG36
350	SEG35
351	SEG34
352	SEG33
353	SEG32
354	SEG31
355	SEG30
356	SEG29
357	SEG28
358	SEG27
359	SEG26
360	SEG25
361	SEG24
362	SEG23
363	SEG22
364	SEG21
365	SEG20
366	SEG19
367	SEG18
368	SEG17
369	SEG16
370	SEG15
371	SEG14
372	SEG13
373	SEG12
374	SEG11
375	SEG10
376	SEG9
377	SEG8
378	SEG7
379	SEG6
380	SEG5
381	SEG4
382	SEG3
383	SEG2
384	SEG1
385	SEG0
386	NC
387	NC
388	NC
389	NC
390	NC
391	NC
392	NC
393	NC
394	NC
395	NC
396	NC
397	NC
398	NC
399	NC
400	NC

Pad no.	Pin name
401	COMA0
402	COMA1
403	COMA2
404	COMA3
405	COMA4
406	COMA5
407	COMA6
408	COMA7
409	COMA8
410	COMA9
411	COMA10
412	COMA11
413	COMA12
414	COMA13
415	COMA14
416	COMA15
417	COMA16
418	COMA17
419	COMA18
420	COMA19
421	COMA20
422	COMA21
423	COMA22
424	COMA23
425	COMA24
426	COMA25
427	COMA26
428	COMA27
429	COMA28
430	COMA29
431	COMA30
432	COMA31
433	COMA32
434	COMA33
435	COMA34
436	COMA35
437	COMA36
438	COMA37
439	COMA38
440	COMA39
441	COMA40
442	COMA41
443	COMA42
444	COMA43
445	COMA44
446	COMA45
447	COMA46
448	COMA47
449	COMA48
450	COMA49
451	COMA50
452	COMA51
453	COMA52
454	COMA53
455	COMA54
456	COMA55
457	COMA56
458	COMA57
459	COMA58
460	COMA59
461	COMA60
462	COMA61
463	COMA62
464	COMA63
465	NC
466	NC

7 PIN DESCRIPTIONS

Key:

I = Input	NC = Not Connected
O =Output	Pull LOW= connect to Ground
IO = Bi-directional (input/output)	Pull HIGH= connect to V_{DDIO}
P = Power pin	

Table 7-1: SSD1322 Pin Description

Pin Name	Pin Type	Description
V_{DD}	P	Power supply pin for core logic operation. A capacitor is required to connect between this pin and V_{SS}. Refer to Section 8.10 for details.
V_{DDIO}	P	Power supply for interface logic level. It should be matched with the MCU interface voltage level. Refer to Section 8.10 for details.
V_{CI}	P	Low voltage power supply. V_{CI} must always be equal to or higher than V_{DD} and V_{DDIO}. Refer to Section 8.10 for details.
V_{CC}	P	Power supply for panel driving voltage. This is also the most positive power voltage supply pin.
V_{DD1}	P	Power supply and it should be connected to V_{DD}.
V_{SS}	P	Ground pin.
V_{LSS}	P	Analog system ground pin.
V_{COMH}	P	COM signal deselected voltage level. A capacitor should be connected between this pin and V_{SS}.
BGGND	P	It should be connected to ground.
GPIO0	IO	This is a reserved pin. It should be kept NC.
GPIO1	IO	This is a reserved pin. It should be kept NC.
V_{SL}	P	This is segment voltage reference pin. When external V_{SL} is used, connect with resistor and diode to ground (details depend on application).
BS[1:0]	I	MCU bus interface selection pins. Select appropriate logic setting as described in the following table. **Table 7-2 : Bus Interface selection** **BS[1:0]** — **Bus Interface Selection** 00 — 4 line SPI 01 — 3 line SPI 10 — 8-bit 8080 parallel 11 — 8-bit 6800 parallel **Note** (1) 0 is connected to V_{SS} (2) 1 is connected to V_{DDIO}

Pin Name	Pin Type	Description
I_{REF}	I	This pin is the segment output current reference pin. A resistor should be connected between this pin and V_{SS} to maintain the current around 10uA. Please refer to section 8.6 for the formula of resistor value from I_{REF}.
M/S#	I	This pin must be connected to V_{DDIO} to enable the chip.
CL	IO	External clock input pin. When internal clock is enable (i.e. pull HIGH in CLS pin), this pin is not used and should be connected to Ground. When internal clock is disable (i.e. pull LOW is CLS pin), this pin is the external clock source input pin.
CLS	I	Internal clock selection pin. When this pin is pulled HIGH, internal oscillator is enabled (normal operation). When this pin is pulled LOW, an external clock signal should be connected to CL.
CS#	I	This pin is the chip select input connecting to the MCU. The chip is enabled for MCU communication only when CS# is pulled LOW.
RES#	I	This pin is reset signal input. When the pin is pulled LOW, initialization of the chip is executed. Keep this pin pull HIGH during normal operation.
D/C#	I	This pin is Data/Command control pin connecting to the MCU. When the pin is pulled HIGH, the content at D[7:0] will be interpreted as data. When the pin is pulled LOW, the content at D[7:0] will be interpreted as command.
R/W# (WR#)	I	This pin is read / write control input pin connecting to the MCU interface. When interfacing to a 6800-series microprocessor, this pin will be used as Read/Write (R/W#) selection input. Read mode will be carried out when this pin is pulled HIGH and write mode when LOW. When 8080 interface mode is selected, this pin will be the Write (WR#) input. Data write operation is initiated when this pin is pulled LOW and the chip is selected. When serial interface is selected, this pin R/W (WR#) must be connected to V_{SS}.
E (RD#)	I	This pin is MCU interface input. When interfacing to a 6800-series microprocessor, this pin will be used as the Enable (E) signal. Read/write operation is initiated when this pin is pulled HIGH and the chip is selected. When connecting to an 8080-microprocessor, this pin receives the Read (RD#) signal. Read operation is initiated when this pin is pulled LOW and the chip is selected. When serial interface is selected, this pin E(RD#) must be connected to V_{SS}.
D[7:0]	IO	These pins are bi-directional data bus connecting to the MCU data bus. Unused pins are recommended to tie LOW. (Except for D2 pin in SPI mode) Refer to Section 8.1 for different bus interface connection.
DN[9:0]	IO	These are reserved pins and should be connected to V_{SS}.

Pin Name	Pin Type	Description
FR	O	This pin is No Connection pins. Nothing should be connected to this pin. This pin should be left open individually.
DOF#	O	This pin is No Connection pins. Nothing should be connected to this pin. This pin should be left open individually.
SEG[479:0]	O	These pins provide the OLED segment driving signals. These pins are V_{SS} state when display is OFF.
COM[127:0]	O	These pins provide the Common switch signals to the OLED panel. These pins are in high impedance state when display is OFF.

8 FUNCTIONAL BLOCK DESCRIPTIONS

8.1 MCU Interface

SSD1322 MCU interface consist of 8 data pin and 5 control pins. The pin assignment at different interface mode is summarized in Table 8-1. Different MCU mode can be set by hardware selection on BS[1:0] pins (refer to Table 7-2 for BS[1:0] pins setting)

Table 8-1 : MCU interface assignment under different bus interface mode

Pin Name / Bus Interface	Data/Command Interface								Control Signal				
	D7	**D6**	**D5**	**D4**	**D3**	**D2**	**D1**	**D0**	**E**	**R/W#**	**CS#**	**D/C#**	**RES#**
8-bit 8080	D[7:0]								RD#	WR#	CS#	D/C#	RES#
8-bit 6800	D[7:0]								E	R/W#	CS#	D/C#	RES#
3-wire SPI	Tie LOW					NC	SDIN	SCLK	Tie LOW		CS#	Tie LOW	RES#
4-wire SPI	Tie LOW					NC	SDIN	SCLK	Tie LOW		CS#	D/C#	RES#

8.1.1 MCU Parallel 6800-series Interface

The parallel interface consists of 8 bi-directional data pins (D[7:0]), R/W#, D/C#, E and CS#.

A LOW in R/W# indicates WRITE operation and HIGH in R/W# indicates READ operation.
A LOW in D/C# indicates COMMAND read/write and HIGH in D/C# indicates DATA read/write.
The E input serves as data latch signal while CS# is LOW. Data is latched at the falling edge of E signal.

Table 8-2 : Control pins of 6800 interface

Function	E	R/W#	CS#	D/C#
Write command	↓	L	L	L
Read status	↓	H	L	L
Write data	↓	L	L	H
Read data	↓	H	L	H

Note
(1) ↓ stands for falling edge of signal
(2) H stands for HIGH in signal
(3) L stands for LOW in signal

In order to match the operating frequency of display RAM with that of the microprocessor, some pipeline processing is internally performed which requires the insertion of a dummy read before the first actual display data read. This is shown in Figure 8-1.

Figure 8-1 : Data read back procedure - insertion of dummy read

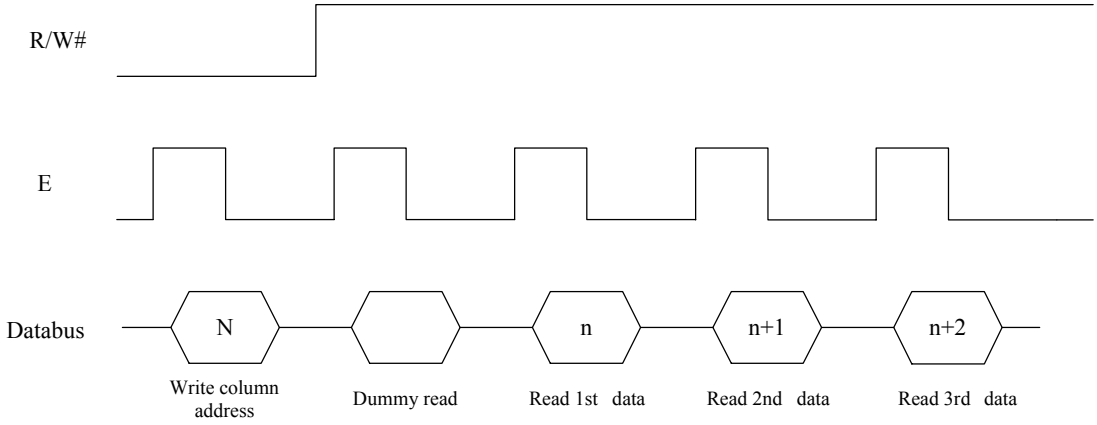

8.1.2 MCU Parallel 8080-series Interface

The parallel interface consists of 8 bi-directional data pins (D[7:0]), RD#, WR#, D/C# and CS#.

A LOW in D/C# indicates COMMAND read/write and HIGH in D/C# indicates DATA read/write.
A rising edge of RD# input serves as a data READ latch signal while CS# is kept LOW.
A rising edge of WR# input serves as a data/command WRITE latch signal while CS# is kept LOW.

Figure 8-2 : Example of Write procedure in 8080 parallel interface mode

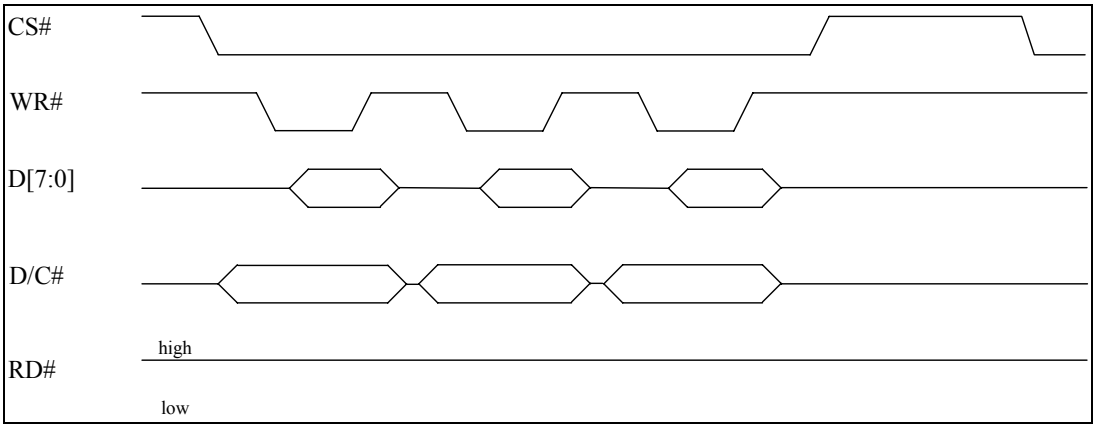

Figure 8-3 : Example of Read procedure in 8080 parallel interface mode

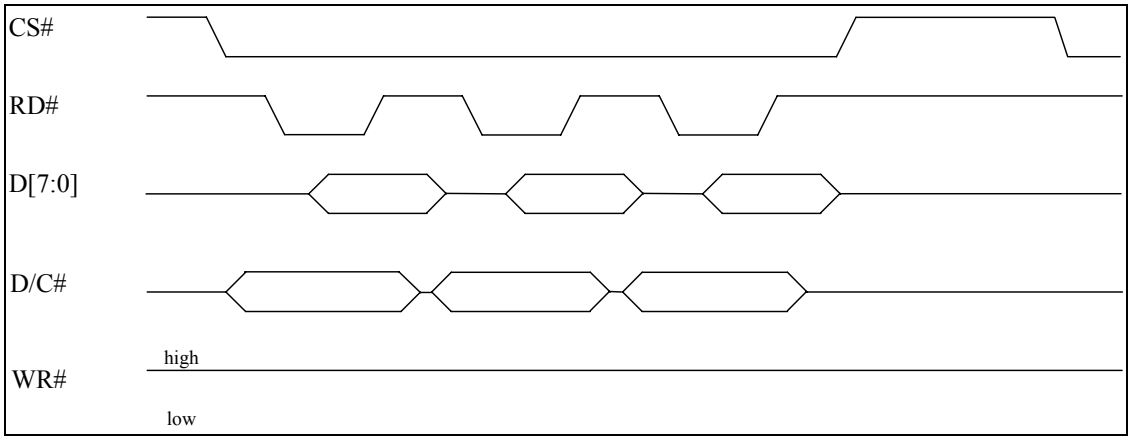

Table 8-3 : Control pins of 8080 interface

Function	RD#	WR#	CS#	D/C#
Write command	H	↑	L	L
Read status	↑	H	L	L
Write data	H	↑	L	H
Read data	↑	H	L	H

Note
(1) ↑ stands for rising edge of signal
(2) H stands for HIGH in signal
(3) L stands for LOW in signal
(4) Refer to
Figure 13-2 for Form 1 8080-Series MPU Parallel Interface Timing Characteristics

In order to match the operating frequency of display RAM with that of the microprocessor, some pipeline processing is internally performed which requires the insertion of a dummy read before the first actual display data read. This is shown in Figure 8-4.

Figure 8-4 : Display data read back procedure - insertion of dummy read

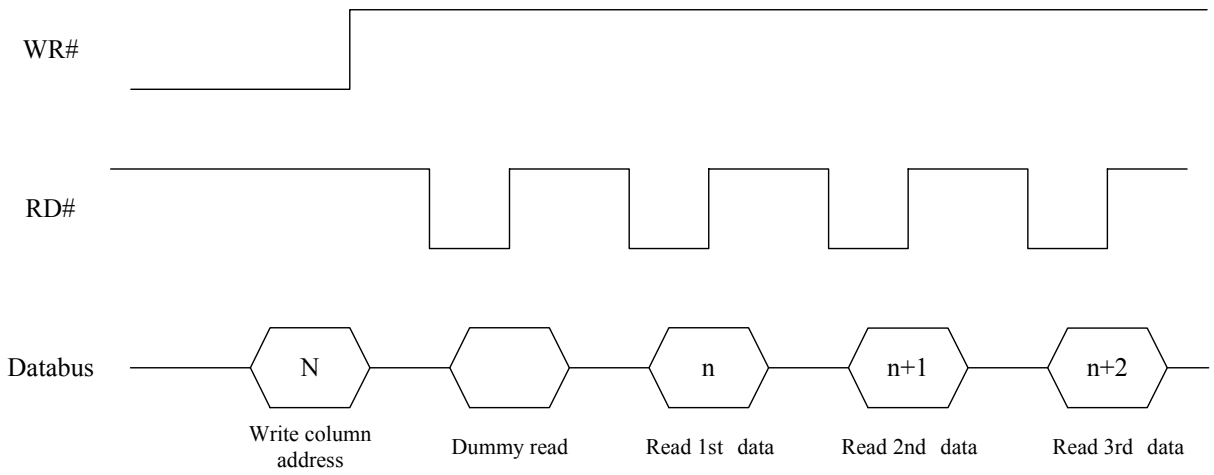

8.1.3 MCU Serial Interface (4-wire SPI)

The serial interface consists of serial clock SCLK, serial data SDIN, D/C#, CS#. In SPI mode, D0 acts as SCLK, D1 acts as SDIN. For the unused data pins, D2 should be left open. The pins from D3 to D7, E and R/W# can be connected to an external ground.

Table 8-4 : Control pins of 4-wire Serial interface

Function	E(RD#)	R/W#(WR#)	CS#	D/C#	D0
Write command	Tie LOW	Tie LOW	L	L	↑
Write data	Tie LOW	Tie LOW	L	H	↑

Note
(1) H stands for HIGH in signal
(2) L stands for LOW in signal

SDIN is shifted into an 8-bit shift register on every rising edge of SCLK in the order of D7, D6, ... D0. D/C# is sampled on every eighth clock and the data byte in the shift register is written to the Graphic Display Data RAM (GDDRAM) or command register in the same clock.

Under serial mode, only write operations are allowed.

Figure 8-5 : Write procedure in 4-wire Serial interface mode

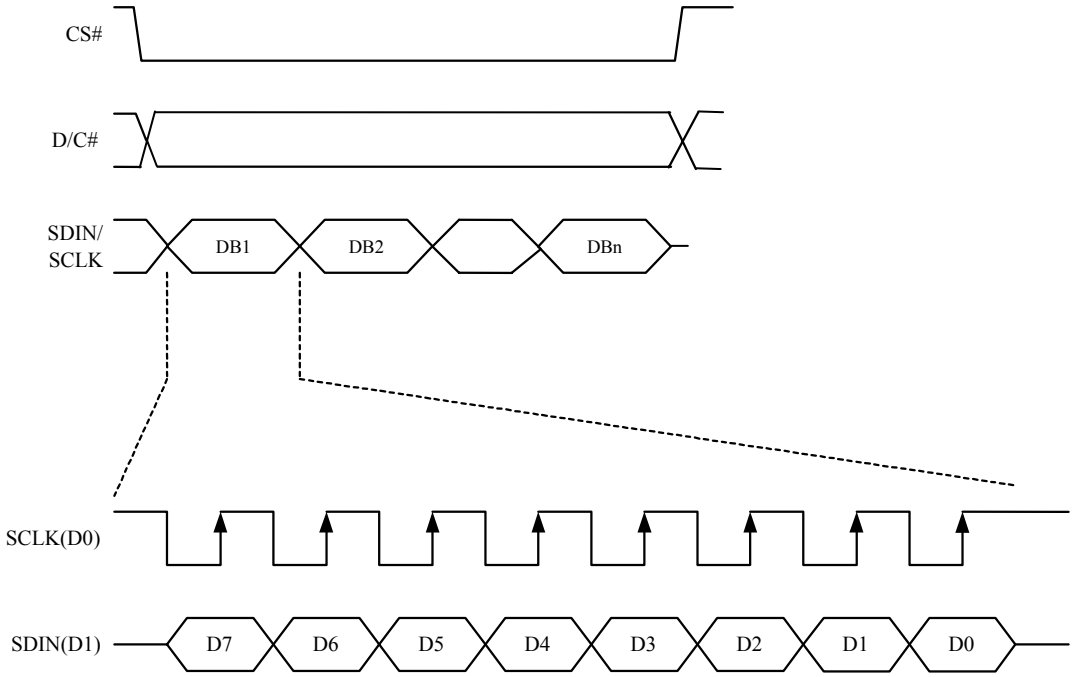

8.1.4 MCU Serial Interface (3-wire SPI)

The 3-wire serial interface consists of serial clock SCLK, serial data SDIN and CS#.
In 3-wire SPI mode, D0 acts as SCLK, D1 acts as SDIN. For the unused data pins, D2 should be left open. The pins from D3 to D7, R/W# (WR#), E(RD#) and D/C# can be connected to an external ground.

The operation is similar to 4-wire serial interface while D/C# pin is not used. There are altogether 9-bits will be shifted into the shift register on every ninth clock in sequence: D/C# bit, D7 to D0 bit. The D/C# bit (first bit of the sequential data) will determine the following data byte in the shift register is written to the Display Data RAM (D/C# bit = 1) or the command register (D/C# bit = 0). Under serial mode, only write operations are allowed.

Table 8-5: Control pins of 3-wire Serial interface

Function	E(RD#)	R/W#(WR#)	CS#	D/C#	D0
Write command	Tie LOW	Tie LOW	L	Tie LOW	↑
Write data	Tie LOW	Tie LOW	L	Tie LOW	↑

Note
(1) L stands for LOW in signal

Figure 8-6: Write procedure in 3-wire Serial interface mode

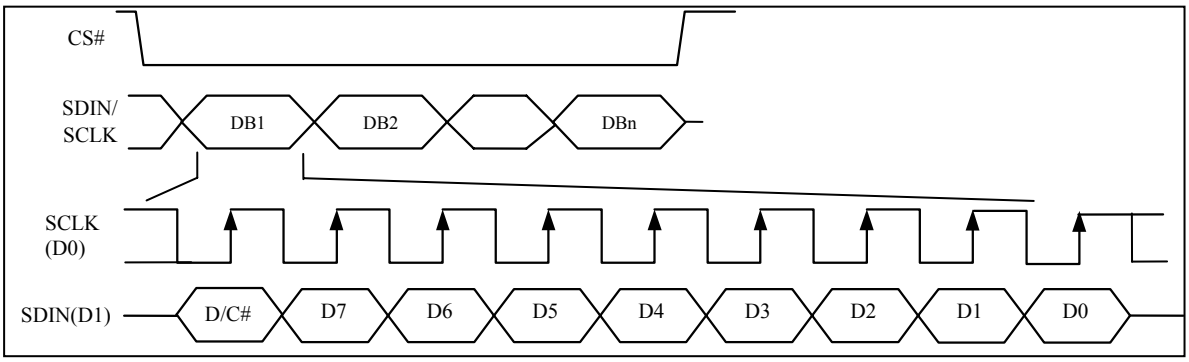

8.2 Reset Circuit

When RES# input is pulled LOW, the chip is initialized with the following status:

1. Display is OFF
2. 128 MUX Display Mode
3. Normal segment and display data column address and row address mapping (SEG0 mapped to address 00h and COM0 mapped to address 00h)
4. Display start line is set at display RAM address 0
5. Column address counter is set at 0
6. Normal scan direction of the COM outputs
7. Contrast control register is set at 7Fh

8.3 GDDRAM

8.3.1 GDDRAM structure in Gray Scale mode

The GDDRAM address map in Table 8-6 shows the GDDRAM in Gray Scale mode. Since in Gray Scale mode, there are 16 gray levels. Therefore four bits (one nibble) are allocated for each pixel. For example D30480[3:0] in Table 8-6 corresponds to the pixel located in (COM127, SEG2). So the lower nibble and higher nibble of D0, D1, D2, …, D30717, D30718, D30719 in Table 8-6 represent the 480x128 data nibbles in the GDDRAM.

Table 8-6 : GDDRAM in Gray Scale mode (RESET)

		SEG0	SEG1	SEG2	SEG3		SEG476	SEG477	SEG478	SEG479	SEG Outputs
		00		00			77		77		RAM Column address (HEX)
COM0	00	D1[3:0]	D1[7:4]	D0[3:0]	D0[7:4]		D239[3:0]	D239[7:4]	D238[3:0]	D238[7:4]	
COM1	01	D241[3:0]	D241[7:4]	D240[3:0]	D240[7:4]		D479[3:0]	D479[7:4]	D478[3:0]	D478[7:4]	
|	|										
COM126	7E	D30241[3:0]	D30241[7:4]	D30240[3:0]	D30240[7:4]		D30479[3:0]	D30479[7:4]	D30478[3:0]	D30478[7:4]	
COM127	7F	D30481[3:0]	D30481[7:4]	D30480[3:0]	D30480[7:4]		D30719[3:0]	D30719[7:4]	D30718[3:0]	D30718[7:4]	
COM Outputs	RAM Row Address (HEX)										

Corresponding to one pixel

8.3.2 Data bus to RAM mapping

Table 8-7 : Data bus usage

Read / Write Data		Data bus D[7:0]							
Bus width	**Input order**	**D7**	**D6**	**D5**	**D4**	**D3**	**D2**	**D1**	**D0**
8 bits	1st	3	3	3	3	2	2	2	2
	2nd	1	1	1	1	0	0	0	0

Corresponding to one pixel

8.4 Command Decoder

This module determines whether the input should be interpreted as data or command based upon the input of the D/C# pin.

If D/C# pin is HIGH, data is written to Graphic Display Data RAM (GDDRAM). If it is LOW, the inputs at D0-D7 are interpreted as a Command and it will be decoded and be written to the corresponding command register.

8.5 Oscillator & Timing Generator

Figure 8-7 : Oscillator Circuit

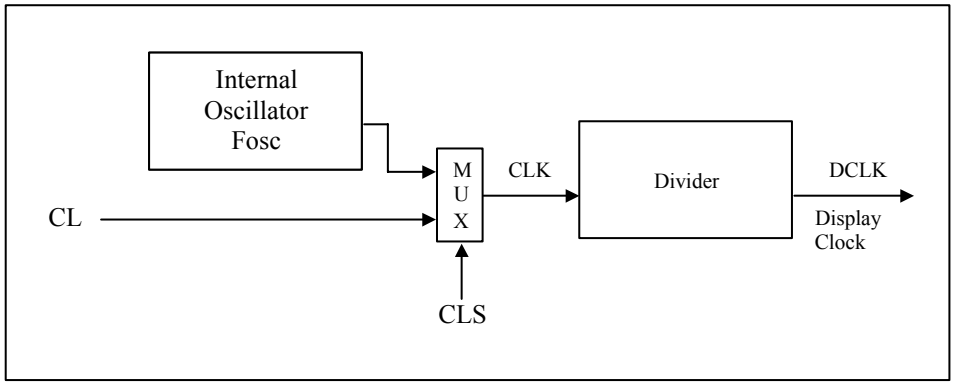

This module is an On-Chip low power RC oscillator circuitry (Figure 8-7). The operation clock (CLK) can be generated either from internal oscillator or external source CL pin by CLS pin. If CLS pin is HIGH, internal oscillator is selected. If CLS pin is LOW, external clock from CL pin will be used for CLK. The frequency of internal oscillator F_{OSC} can be programmed by command B3h.

The display clock (DCLK) for the Display Timing Generator is derived from CLK. The division factor "D" can be programmed from 1 to 1024 by command B3h.

$$DCLK = F_{OSC} / D$$

The frame frequency of display is determined by the following formula:

$$F_{FRM} = \frac{F_{osc}}{D \times K \times \text{No. of Mux}}$$

where

- D stands for clock divide ratio. It is set by command B3h A[3:0]. The divide ratio has the range from 1 to 1024.
- K is the number of display clocks per row. The value is derived by
  K = Phase 1 period + Phase 2 period + X
  X = DCLKs in current drive period. Default X = constant + GS15 = 10 +112 = 122
  Default K is 9 + 7 + 122 = 138
- Number of multiplex ratio is set by command A8h. The reset value is 127 (i.e. 128MUX).
- F_{osc} is the oscillator frequency. It can be changed by command B3h A[7:4]. The higher the register setting results in higher frequency.

If the frame frequency is set too low, flickering may occur. On the other hand, higher frame frequency leads to higher power consumption on the whole system.

8.6 SEG/COM Driving Block

This block is used to derive the incoming power sources into the different levels of internal use voltage and current.

- V_{CC} is the most positive voltage supply.
- V_{COMH} is the Common deselected level. It is internally regulated.
- V_{LSS} is the ground path of the analog and panel current.
- I_{REF} is a reference current source for segment current drivers I_{SEG}. The relationship between reference current and segment current of a color is:

  I_{SEG} = Contrast / 256 * I_{REF} * scale factor *2

  in which
  the contrast (0~255) is set by Set Contrast command (C1h); and
  the scale factor (1 ~ 16) is set by Master Current Control command (C7h).

For example, in order to achieve I_{SEG} = 300uA at maximum contrast 255, I_{REF} is set to around 10uA. This current value is obtained by connecting an appropriate resistor from I_{REF} pin to V_{SS} as shown in Figure 8-8.

Recommended I_{REF} = 10uA

Figure 8-8 : I_{REF} Current Setting by Resistor Value

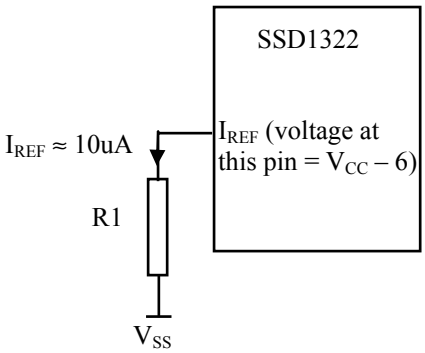

Since the voltage at I_{REF} pin is V_{CC} – 6V, the value of resistor R1 can be found as below:

For I_{REF} = 10uA, V_{CC} = 18V:

R1 = (Voltage at I_{REF} – V_{SS}) / I_{REF}
= (18 – 6) / 10uA
≈ 1.2MΩ

8.7 SEG / COM Driver

Segment drivers consist of 480 current sources to drive OLED panel. The driving current can be adjusted from 0 to 300uA with 8 bits, 256 steps by contrast setting command (C1h). Common drivers generate scanning voltage pulse. The block diagrams and waveforms of the segment and common driver are shown as follow.

Figure 8-9 : Segment and Common Driver Block Diagram – Single COM mode

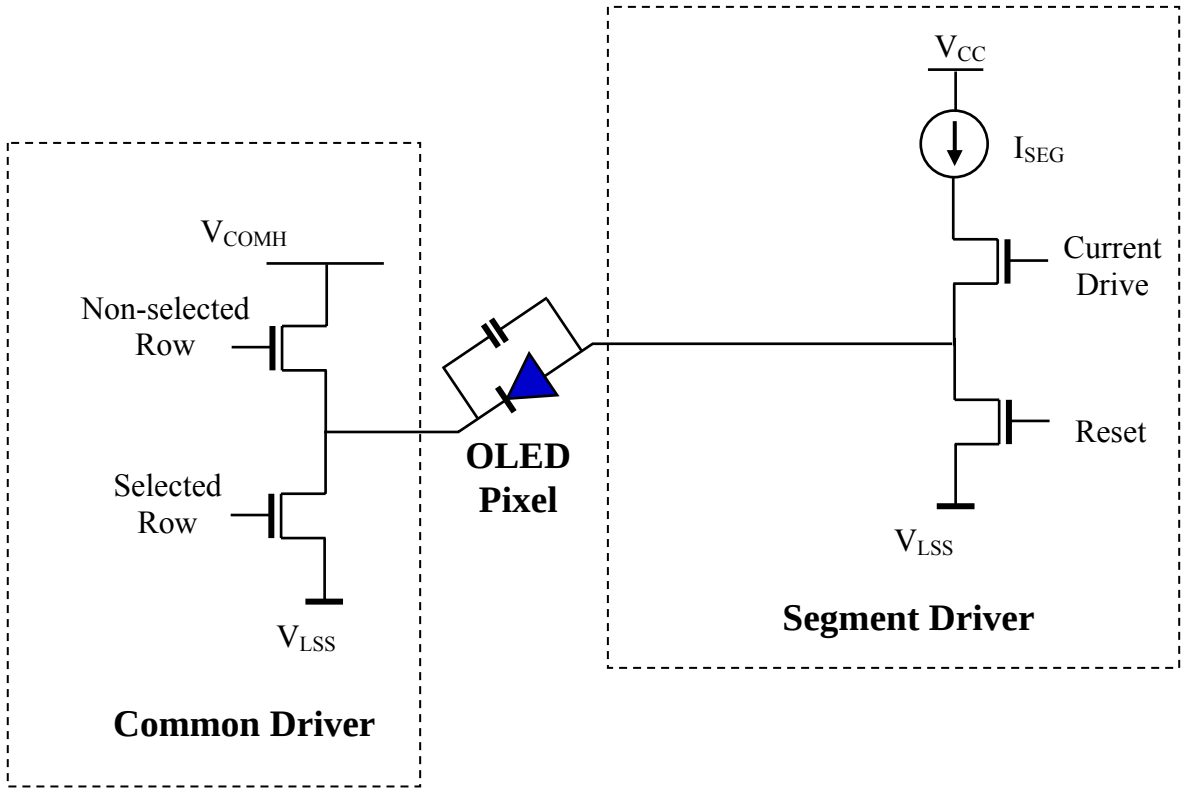

Figure 8-10 : Segment and Common Driver Block Diagram – Dual COM mode

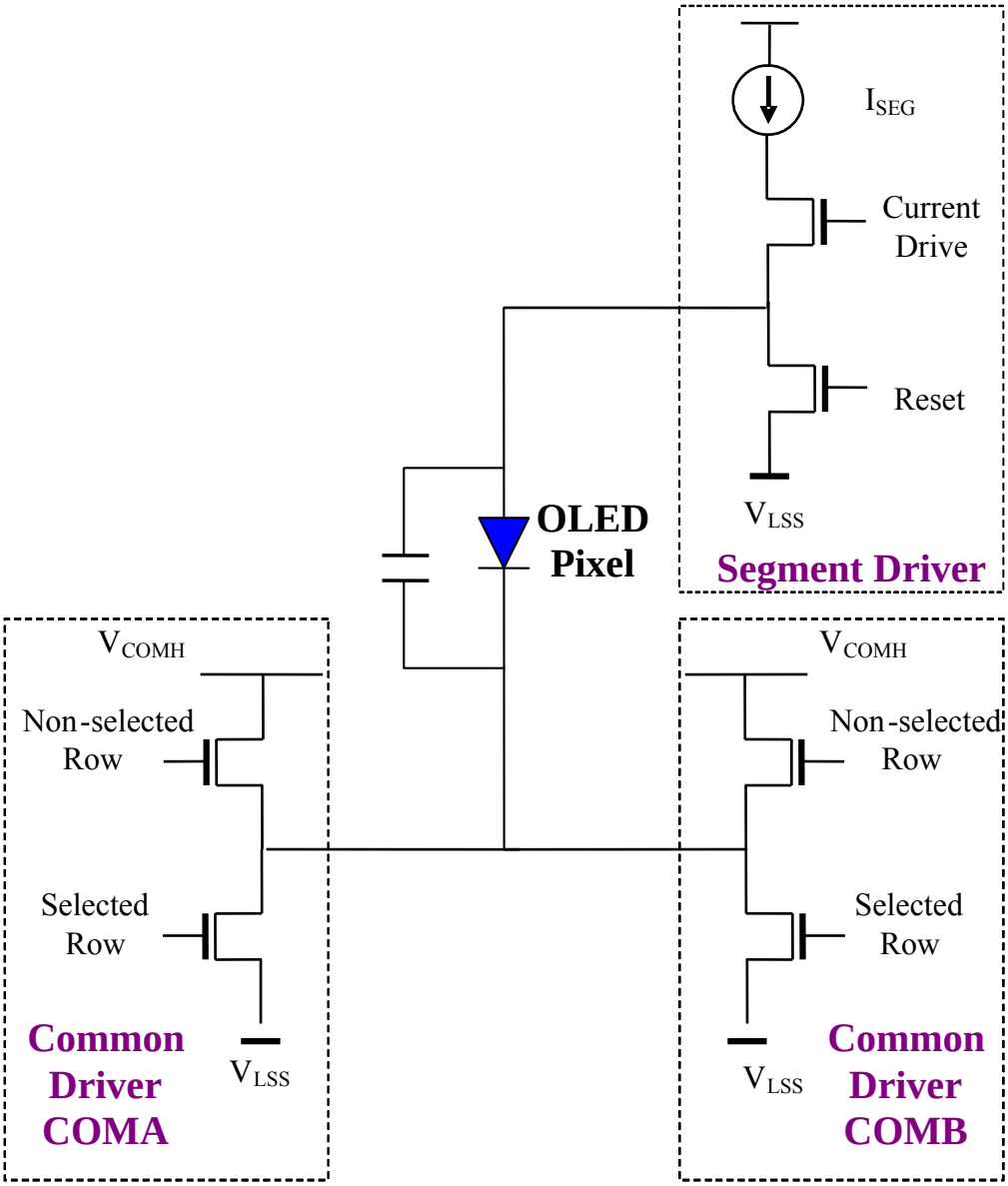

The commons are scanned sequentially, row by row. If a row is not selected, all the pixels on the row are in reverse bias by driving those commons to voltage V_{COMH} as shown in Figure 8-11.

In the scanned row, the pixels on the row will be turned ON or OFF by sending the corresponding data signal to the segment pins. If the pixel is turned OFF, the segment current is kept at 0. On the other hand, the segment drives to I_{SEG} when the pixel is turned ON.

Figure 8-11 : Segment and Common Driver Signal Waveform

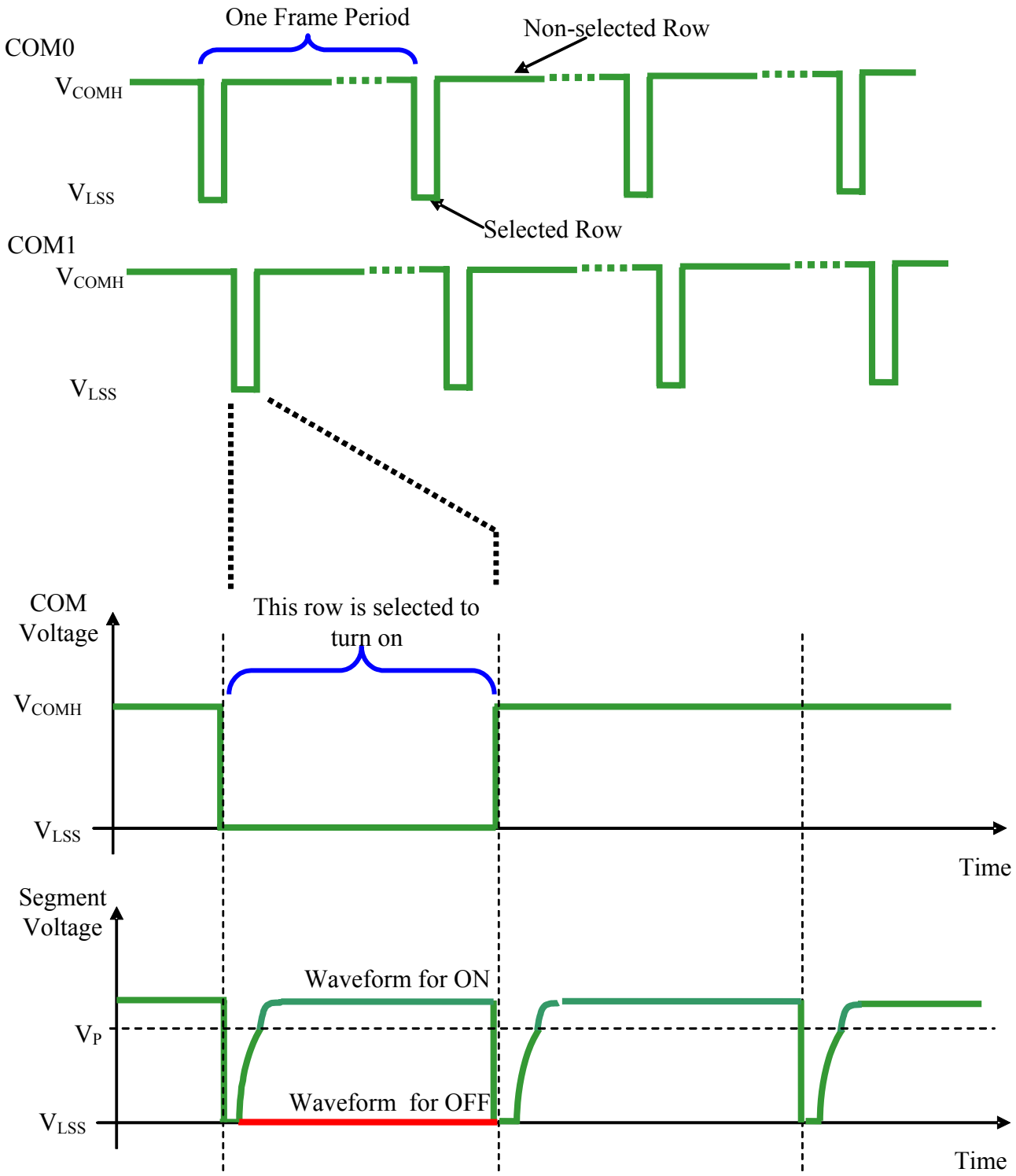

There are four phases to driving an OLED a pixel. In phase 1, the pixel is reset by the segment driver to V_{LSS} in order to discharge the previous data charge stored in the parasitic capacitance along the segment electrode. The period of phase 1 can be programmed by command B1h A[3:0]. An OLED panel with larger capacitance requires a longer period for discharging.

In phase 2, first pre-charge is performed. The pixel is driven to attain the corresponding voltage level V_P from V_{LSS}. The amplitude of V_P can be programmed by the command BBh. The period of phase 2 can be programmed by command B1h A[7:4]. If the capacitance value of the pixel of OLED panel is larger, a longer period is required to charge up the capacitor to reach the desired voltage.

In phase 3, the OLED pixel is driven to the targeted driving voltage through second pre-charge. The second pre-charge can control the speed of the charging process. The period of phase 3 can be programmed by command B6h.

Last phase (phase 4) is current drive stage. The current source in the segment driver delivers constant current to the pixel. The driver IC employs PWM (Pulse Width Modulation) method to control the gray scale of each pixel individually. The gray scale can be programmed into different Gamma settings by command B8h/B9h. The bigger gamma setting (the wider pulse widths) in the current drive stage results in brighter pixels and vice versa (details refer to Section 8.8). This is shown in the following figure.

Figure 8-12 : Gray Scale Control by PWM in Segment

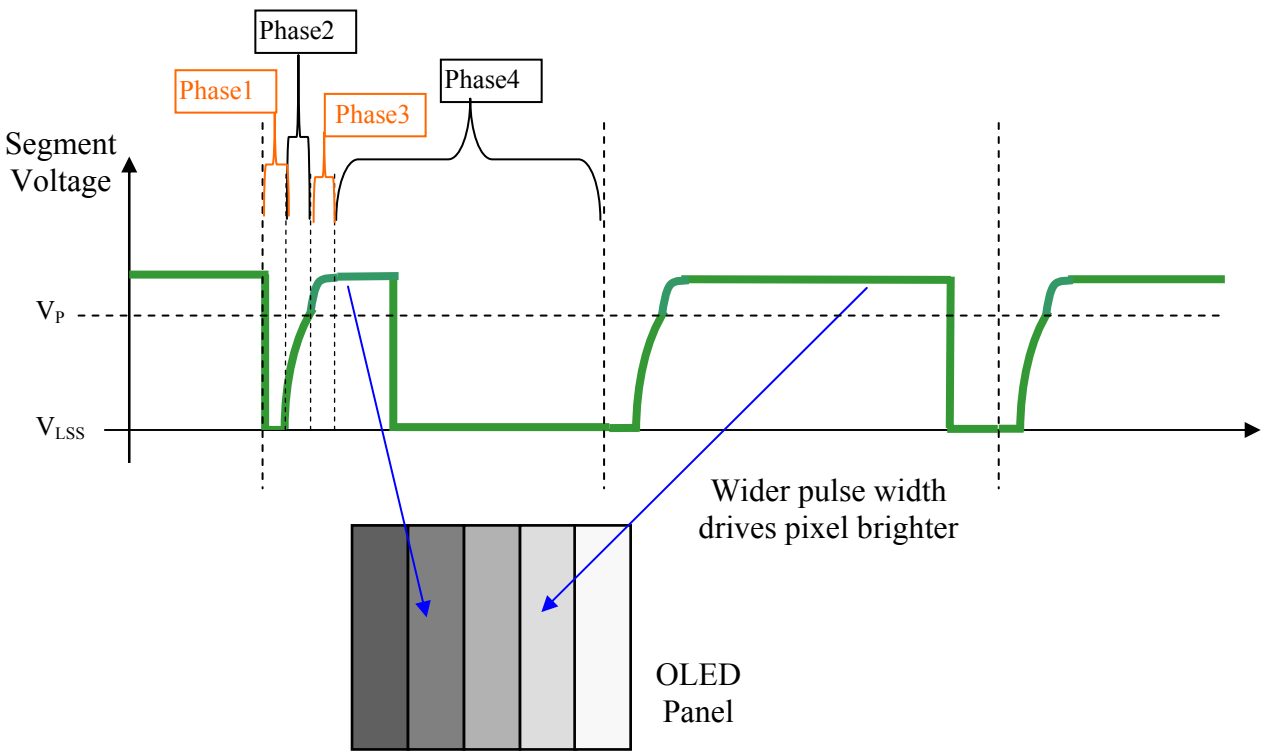

After finishing phase 4, the driver IC will go back to phase 1 to display the next row image data. This four-step cycle is run continuously to refresh image display on OLED panel.

The length of phase 4 is defined by command B8h or B9h. In the table, the gray scale is defined in incremental way, with reference to the length of previous table entry.

8.8 Gray Scale Decoder

The gray scale effect is generated by controlling the pulse width (PW) of current drive phase, except GS0 there is no pre-charge (phase 2, 3) and current drive (phase 4). The driving period is controlled by the gray scale settings (setting 0 ~ setting 180). The larger the setting, the brighter the pixel will be. The Gray Scale Table stores the corresponding gray scale setting of the 16 gray scale levels (GS0~GS15) through the software commands B8h or B9h.

As shown in Figure 8-13, GDDRAM data has 4 bits, represent the 16 gray scale levels from GS0 to GS15. Note that the frame frequency is affected by GS15 setting.

Figure 8-13 : Relation between GDDRAM content and Gray Scale table entry (under command B9h Enable Linear Gray Scale Table)

GDDRAM data (4 bits)	Gray Scale Table	Default Gamma Setting (Command B9h)
0000	GS0	Setting 0
0001	GS1 (1)	Setting 0
0010	GS2	Setting 8
0011	GS3	Setting 16
:	:	:
:	:	:
1101	GS13	Setting 96
1110	GS14	Setting 104
1111	GS15	Setting 112

Note:
(1) Both GS0 and GS1 have no 2nd pre-charge (phase 3) and current drive (phase 4), however GS1 has 1st pre-charge (phase 2).

8.9 Power ON and OFF sequence

The following figures illustrate the recommended power ON and power OFF sequence of SSD1322 (assume V_{CI} and V_{DDIO} are at the same voltage level and internal V_{DD} is used).

Power ON sequence:

1. Power ON V_{CI}, V_{DDIO}.
2. After V_{CI}, V_{DDIO} become stable, set wait time at least 1ms (t_0) for internal V_{DD} become stable. Then set RES# pin LOW (logic low) for at least 100us (t_1) [(4)] and then HIGH (logic high).
3. After set RES# pin LOW (logic low), wait for at least 100us (t_2). Then Power ON V_{CC}.[(1)]
4. After V_{CC} become stable, send command AFh for display ON. SEG/COM will be ON after 200ms (t_{AF}).
5. After V_{CI} become stable, wait for at least 300ms to send command.

Figure 8-14 : The Power ON sequence.

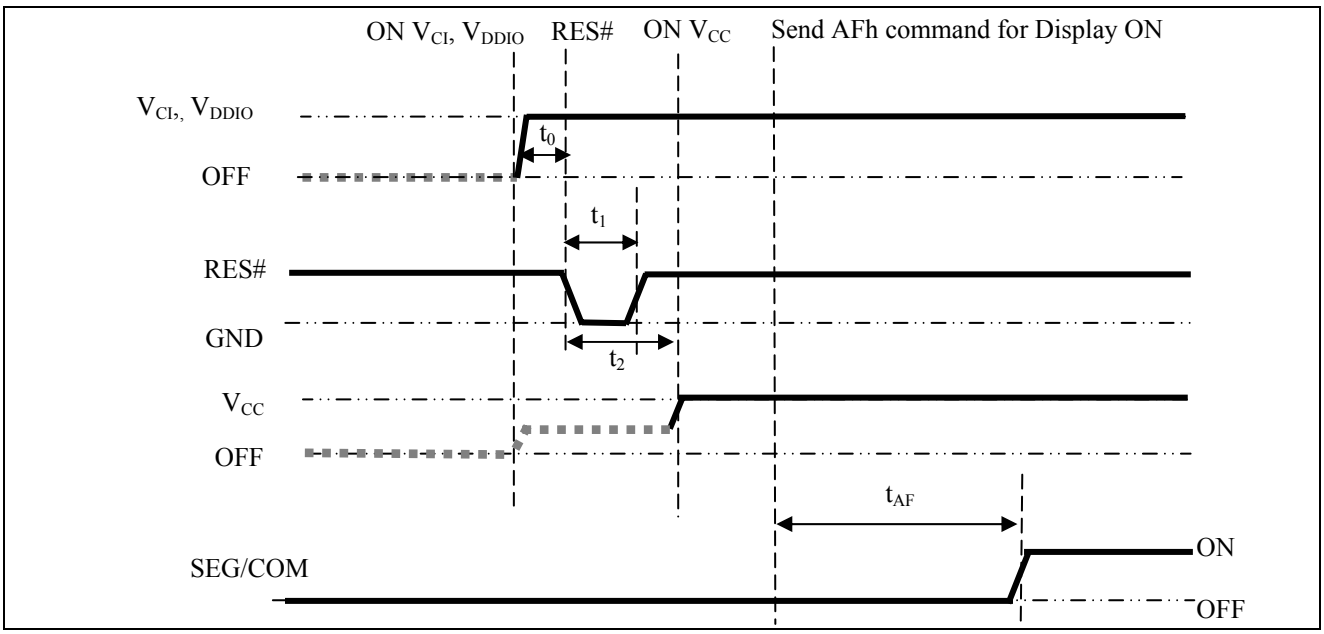

Power OFF sequence:

1. Send command AEh for display OFF.
2. Power OFF V_{CC}.[(1), (2)]
3. Wait for t_{OFF}. Power OFF V_{CI}, V_{DDIO}. (where Minimum t_{OFF}=0ms [(3)], Typical t_{OFF}=100ms)

Figure 8-15 : The Power OFF sequence

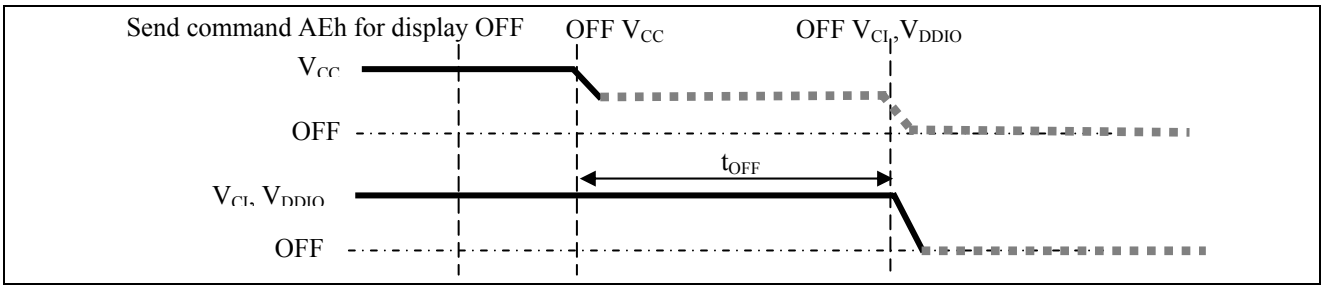

Note:

(1) Since an ESD protection circuit is connected between V_{CI}, V_{DDIO} and V_{CC}, V_{CC} becomes lower than V_{CI} whenever V_{CI}, V_{DDIO} is ON and V_{CC} is OFF as shown in the dotted line of V_{CC} in Figure 8-14 and Figure 8-15.

(2) V_{CC} should be kept float (disable) when it is OFF.

(3) V_{CI}, V_{DDIO} should not be Power OFF before V_{CC} Power OFF.

(4) The register values are reset after t_1.

(5) Power pins (V_{DD}, V_{CC}) can never be pulled to ground under any circumstance.

8.10 V_{DD} Regulator

In SSD1322, the power supply pin for core logic operation, V_{DD}, can be supplied by external source or internally regulated through the V_{DD} regulator.

The internal V_{DD} regulator is enabled by setting bit A[0] to 1b in command ABh "Function Selection". V_{CI} should be larger than 2.6V when using the internal V_{DD} regulator. The typical regulated V_{DD} is about 2.5V

It should be notice that, no matter V_{DD} is supplied by external source or internally regulated; V_{CI} must always be set equivalent to or higher than V_{DD} and V_{DDIO}.

The following figure shows the V_{DD} regulator pin connection scheme:

Figure 8-16 V_{CI} > 2.6V, V_{DD} regulator enable pin connection scheme

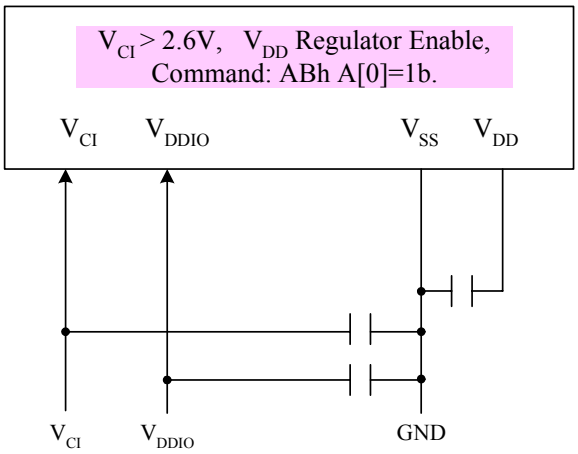

Figure 8-17 V_{DD} regulator disable pin connection scheme

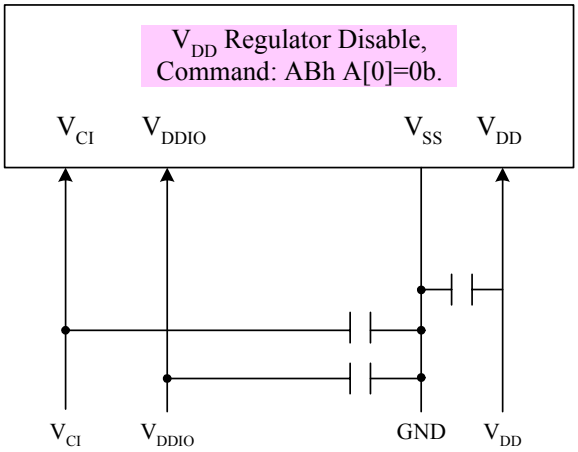

9 COMMAND TABLE

Table 9-1 : Command table

(D/C#=0, R/W#(WR#) = 0, E(RD#)=1) unless specific setting is stated)

Fundamental Command Table

D/C#	Hex	D7	D6	D5	D4	D3	D2	D2	D0	Command	Description
0	00	0	0	0	0	0	0	0	0	Enable Gray Scale table	This command is sent to enable the Gray Scale table setting (command B8h)
0 1 1	15 A[6:0] B[6:0]	0 * *	0 A_6 B_6	0 A_5 B_5	1 A_4 B_4	0 A_3 B_3	1 A_2 B_2	0 A_1 B_1	1 A_0 B_0	Set Column Address	Set Column start and end address A[6:0]: Start Address. [reset=0] B[6:0]: End Address. [reset=119] Range from 0 to 119
0	5C	0	1	0	1	1	1	0	0	Write RAM Command	Enable MCU to write Data into RAM
0	5D	0	1	0	1	1	1	0	1	Read RAM Command	Enable MCU to read Data from RAM
0 1 1	75 A[6:0] B[6:0]	0 * *	1 A_6 B_6	1 A_5 B_5	1 A_4 B_4	0 A_3 B_3	1 A_2 B_2	0 A_1 B_1	1 A_0 B_0	Set Row Address	Set Row start and end address A[6:0]: Start Address. [reset=0] B[6:0]: End Address. [reset=127] Range from 0 to 127
0 1 1	A0 A[7:0] B[4]	1 0 *	0 0 *	1 A_5 0	0 A_4 B_4	0 0 0	0 A_2 0	0 A_1 0	0 A_0 1	Set Re-map and Dual COM Line mode	A[0]=0b, Horizontal address increment [reset] A[0]=1b, Vertical address increment A[1]=0b, Disable Column Address Re-map [reset] A[1]=1b, Enable Column Address Re-map A[2]=0b, Disable Nibble Re-map [reset] A[2]=1b, Enable Nibble Re-map A[4]=0b, Scan from COM0 to COM[N –1] [reset] A[4]=1b, Scan from COM[N-1] to COM0, where N is the Multiplex ratio A[5]=0b, Disable COM Split Odd Even [reset] A[5]=1b, Enable COM Split Odd Even B[4], Enable / disable Dual COM Line mode 0b, Disable Dual COM mode [reset] 1b, Enable Dual COM mode (MUX ≤ 63) **Note** (1) COM Split Odd Even mode must be disabled (A[5]=0b) when enabling the Dual COM mode (B[4]=1b) Details refer to Section 10.1.6
0 1	A1 A[6:0]	1 *	0 A_6	1 A_5	0 A_4	0 A_3	0 A_2	0 A_1	1 A_0	Set Display Start Line	Set display RAM display start line register from 0-127 Display start line register is reset to 00h after RESET

<table>
<tr><th>D/C#</th><th>Hex</th><th>D7</th><th>D6</th><th>D5</th><th>D4</th><th>D3</th><th>D2</th><th>D2</th><th>D0</th><th>Command</th><th>Description</th></tr>
<tr><td>0
1</td><td>A2
A[6:0]</td><td>1
*</td><td>0
A_6</td><td>1
A_5</td><td>0
A_4</td><td>0
A_3</td><td>0
A_2</td><td>1
A_1</td><td>0
A_0</td><td>Set Display Offset</td><td>Set vertical scroll by COM from 0-127
The value is reset to 00H after RESET</td></tr>
<tr><td>0</td><td>A4~A7</td><td>1</td><td>0</td><td>1</td><td>0</td><td>0</td><td>X_2</td><td>X_1</td><td>X_0</td><td>Set Display Mode</td><td>A4h = Entire Display OFF, all pixels turns OFF in GS level 0

A5h = Entire Display ON, all pixels turns ON in GS level 15

A6h = Normal Display [reset]

A7h = Inverse Display (GS0 → GS15, GS1 → GS14, GS2 → GS13, …)</td></tr>
<tr><td>0
1
1</td><td>A8
A[6:0]
B[6:0]</td><td>1
0
0</td><td>0
A_6
B_6</td><td>1
A_5
B_5</td><td>0
A_4
B_4</td><td>1
A_3
B_3</td><td>0
A_2
B_2</td><td>0
A_1
B_1</td><td>0
A_0
B_0</td><td>Enable Partial Display</td><td>This command turns ON partial mode. The partial mode display area is defined by the following two parameters,

A[6:0]: Address of start row in the display area
B[6:0]: Address of end row in the display area,
where B[6:0] must be ≥ A[6:0]</td></tr>
<tr><td>0</td><td>A9</td><td>1</td><td>0</td><td>1</td><td>0</td><td>1</td><td>0</td><td>0</td><td>1</td><td>Exit Partial Display</td><td>This command is sent to exit the Partial Display mode</td></tr>
<tr><td>0
1</td><td>AB
A[0]</td><td>1
0</td><td>0
0</td><td>1
0</td><td>0
0</td><td>1
0</td><td>0
0</td><td>1
0</td><td>1
A_0</td><td>Function Selection</td><td>A[0]=0b, Select external V_{DD}
A[0]=1b, Enable internal V_{DD} regulator [reset]</td></tr>
<tr><td>0</td><td>AE~AF</td><td>1</td><td>0</td><td>1</td><td>0</td><td>1</td><td>1</td><td>1</td><td>X_0</td><td>Set Sleep mode ON/OFF</td><td>AEh = Sleep mode ON (Display OFF)
AFh = Sleep mode OFF (Display ON)</td></tr>
<tr><td>0
1</td><td>B1
A[7:0]</td><td>1
A_7</td><td>0
A_6</td><td>1
A_5</td><td>1
A_4</td><td>0
A_3</td><td>0
A_2</td><td>0
A_1</td><td>1
A_0</td><td>Set Phase Length</td><td>A[3:0] Phase 1 period (reset phase length) of 5~31 DCLK(s) clocks as follow:

<table><tr><th>A[3:0]</th><th>Phase 1 period</th></tr><tr><td>0000</td><td>invalid</td></tr><tr><td>0001</td><td>invalid</td></tr><tr><td>0010</td><td>5 DCLKs</td></tr><tr><td>0011</td><td>7 DCLKs</td></tr><tr><td>0100</td><td>9 DCLKs [reset]</td></tr><tr><td>:</td><td>:</td></tr><tr><td>1111</td><td>31 DCLKs</td></tr></table>
A[7:4] Phase 2 period (first pre-charge phase length) of 3~15 DCLK(s) clocks as follow:

<table><tr><th>A[7:4]</th><th>Phase 2 period</th></tr><tr><td>0000</td><td>invalid</td></tr><tr><td>0001</td><td>invalid</td></tr><tr><td>0010</td><td>invalid</td></tr><tr><td>0011</td><td>3 DCLKs</td></tr><tr><td>:</td><td>:</td></tr><tr><td>0111</td><td>7 DCLKs [reset]</td></tr><tr><td>:</td><td>:</td></tr><tr><td>1111</td><td>15 DCLKs</td></tr></table></td></tr>
</table>

<table>
<tr><th>D/C#</th><th>Hex</th><th>D7</th><th>D6</th><th>D5</th><th>D4</th><th>D3</th><th>D2</th><th>D2</th><th>D0</th><th>Command</th><th>Description</th></tr>
<tr><td>0
1</td><td>B3
A[7:0]</td><td>1
A_7</td><td>0
A_6</td><td>1
A_5</td><td>1
A_4</td><td>0
A_3</td><td>0
A_2</td><td>1
A_1</td><td>1
A_0</td><td>Set Front Clock Divider / Oscillator Frequency</td><td>A[3:0] [reset=0], divide by DIVSET where
<table>
<tr><th>A[3:0]</th><th>DIVSET</th></tr>
<tr><td>0000</td><td>divide by 1</td></tr>
<tr><td>0001</td><td>divide by 2</td></tr>
<tr><td>0010</td><td>divide by 4</td></tr>
<tr><td>0011</td><td>divide by 8</td></tr>
<tr><td>0100</td><td>divide by 16</td></tr>
<tr><td>0101</td><td>divide by 32</td></tr>
<tr><td>0110</td><td>divide by 64</td></tr>
<tr><td>0111</td><td>divide by 128</td></tr>
<tr><td>1000</td><td>divide by 256</td></tr>
<tr><td>1001</td><td>divide by 512</td></tr>
<tr><td>1010</td><td>divide by 1024</td></tr>
<tr><td>>=1011</td><td>invalid</td></tr>
</table>
A[7:4] Oscillator frequency, frequency increases as level increases [reset=0101b]</td></tr>
<tr><td>0
1
1</td><td>B4
A[1:0]
B[7:3]</td><td>1
1
B_7</td><td>0
0
B_6</td><td>1
1
B_5</td><td>1
0
B_4</td><td>0
0
B_3</td><td>1
0
1</td><td>0
A_1
0</td><td>0
A_0
1</td><td>Display Enhancement A</td><td>A[1:0] = 00b: Enable external VSL
A[1:0] = 10b: Internal VSL [reset]

B[7:3] = 11111b: Enhanced low GS display quality
B[7:3] = 10110b: Normal [reset]</td></tr>
<tr><td>0
1</td><td>B5
A[3:0]</td><td>1
*</td><td>0
*</td><td>1
*</td><td>1
*</td><td>0
A_3</td><td>1
A_2</td><td>0
A_1</td><td>1
A_0</td><td>Set GPIO</td><td>A[1:0] GPIO0: 00 pin HiZ, Input disabled
01 pin HiZ, Input enabled
10 pin output LOW [reset]
11 pin output HIGH

A[3:2] GPIO1: 00 pin HiZ, Input disabled
01 pin HiZ, Input enabled
10 pin output LOW [reset]
11 pin output HIGH</td></tr>
<tr><td>0
1</td><td>B6
A[3:0]</td><td>1
*</td><td>0
*</td><td>1
*</td><td>1
*</td><td>0
A_3</td><td>1
A_2</td><td>1
A_1</td><td>0
A_0</td><td>Set Second Precharge Period</td><td>A[3:0] Second Pre-charge period
0000b 0 dclk
0001b 1 dclk
……
1000b 8 dclks [reset]
……
1111b 15 dclks</td></tr>
</table>

<table>
<tr><th>D/C#</th><th>Hex</th><th>D7</th><th>D6</th><th>D5</th><th>D4</th><th>D3</th><th>D2</th><th>D2</th><th>D0</th><th>Command</th><th>Description</th></tr>
<tr><td>0
1
1
1
1
1
1
1</td><td>B8
A1[7:0]
A2[7:0]
.
.
.
A14[7:0]
A15[7:0]</td><td>1
$A1_7$
$A2_7$
.
.
.
$A14_7$
$A15_7$</td><td>0
$A1_6$
$A2_6$
.
.
.
$A14_6$
$A15_6$</td><td>1
$A1_5$
$A2_5$
.
.
.
$A14_5$
$A15_5$</td><td>1
$A1_4$
$A2_4$
.
.
.
$A14_4$
$A15_4$</td><td>1
$A1_3$
$A2_3$
.
.
.
$A14_3$
$A15_3$</td><td>0
$A1_2$
$A2_2$
.
.
.
$A14_2$
$A15_2$</td><td>0
$A1_1$
$A2_1$
.
.
.
$A14_1$
$A15_1$</td><td>0
$A1_0$
$A2_0$
.
.
.
$A14_0$
$A15_0$</td><td>Set Gray Scale Table</td><td>The next 15 data bytes define Gray Scale (GS) Table by setting the gray scale pulse width in unit of DCLK's (ranges from 0d ~ 180d)

A1[7:0]: Gamma Setting for GS1,
A2[7:0]: Gamma Setting for GS2,
:
A14[7:0]: Gamma Setting for GS14,
A15[7:0]: Gamma Setting for GS15

Note
(1) 0 ≤ Setting of GS1 < Setting of GS2 < Setting of GS3..... < Setting of GS14 < Setting of GS15

Refer to Section 8.8 for details

(2) The setting must be followed by the Enable Gray Scale Table command (00h)</td></tr>
<tr><td>0</td><td>B9</td><td>1</td><td>0</td><td>1</td><td>1</td><td>1</td><td>0</td><td>0</td><td>1</td><td>Select Default Linear Gray Scale table</td><td>The default Linear Gray Scale table is set in unit of DCLK's as follow

GS0 level pulse width = 0;
GS1 level pulse width = 0;
GS2 level pulse width = 8;
GS3 level pulse width = 16;
:
:
GS14 level pulse width = 104;
GS15 level pulse width = 112

Refer to Section 8.8 for details</td></tr>
<tr><td>0
1</td><td>BB
A[4:0]</td><td>1
*</td><td>0
*</td><td>1
*</td><td>1
A_4</td><td>1
A_3</td><td>0
A_2</td><td>1
A_1</td><td>1
A_0</td><td>Set Pre-charge voltage</td><td>Set pre-charge voltage level.[reset = 17h]

<table><tr><th>A[4:0]</th><th>Hex code</th><th>pre-charge voltage</th></tr><tr><td>00000</td><td>00h</td><td>0.20 x V_{CC}</td></tr><tr><td>:</td><td>:</td><td>:</td></tr><tr><td>11111</td><td>1Fh</td><td>0.60 x V_{CC}</td></tr></table></td></tr>
<tr><td>0
1</td><td>BE
A[2:0]</td><td>1
*</td><td>0
*</td><td>1
*</td><td>1
*</td><td>1
0</td><td>1
A_2</td><td>1
A_1</td><td>0
A_0</td><td>Set V_{COMH}</td><td>Set COM deselect voltage level [reset = 04h]

<table><tr><th>A[2:0]</th><th>Hex code</th><th>V_{COMH}</th></tr><tr><td>000</td><td>00h</td><td>0.72 x V_{CC}</td></tr><tr><td>:</td><td>:</td><td>:</td></tr><tr><td>100</td><td>04h</td><td>0.80 x V_{CC} [reset]</td></tr><tr><td>:</td><td>:</td><td>:</td></tr><tr><td>111</td><td>07h</td><td>0.86 x V_{CC}</td></tr></table></td></tr>
<tr><td>0
1</td><td>C1
A[7:0]</td><td>1
A_7</td><td>1
A_6</td><td>0
A_5</td><td>0
A_4</td><td>0
A_3</td><td>0
A_2</td><td>0
A_1</td><td>1
A_0</td><td>Set Contrast Current</td><td>A[7:0]: Contrast current value, range:00h~FFh,
i.e. 256 steps for I_{SEG} current [reset = 7Fh]</td></tr>
</table>

D/C#	Hex	D7	D6	D5	D4	D3	D2	D2	D0	Command	Description
0 1	C7 A[3:0]	1 *	1 *	0 *	0 *	0 A_3	1 A_2	1 A_1	1 A_0	Master Contrast Current Control	A[3:0] = 0000b, reduce output currents for all colors to 1/16 0001b, reduce output currents for all colors to 2/16 : 1110b, reduce output currents for all colors to 15/16 1111b, no change [reset]
0 1	CA A[6:0]	1 *	1 A_6	0 A_5	0 A_4	1 A_3	0 A_2	1 A_1	0 A_0	Set MUX Ratio	A[6:0]: Set MUX ratio from 16MUX ~ 128MUX A[6:0] = 15d represents 16MUX : A[6:0] = 127d represents 128MUX [reset]
0 1 1	D1 A[5:4] 20	1 1 0	1 0 0	0 A_5 1	1 A_4 0	0 0 0	0 0 0	0 1 0	1 0 0	Display Enhancement B	A[5:4] = 00b: Reserved A[5:4] = 10b: Normal [reset]
0 1	FD A[2]	1 0	1 0	1 0	1 1	1 0	1 A_2	0 1	1 0	Set Command Lock	A[2]: MCU protection status [reset = 12h] A[2] = 0b, Unlock OLED driver IC MCU interface from entering command [reset] A[2] = 1b, Lock OLED driver IC MCU interface from entering command **Note** (1) The locked OLED driver IC MCU interface prohibits all commands and memory access except the FDh command

Note
(1) "*" stands for "Don't care".

10 COMMAND

10.1.1 Enable Gray Scale Table (00h)

This command is sent to enable the Gray Scale Table setting (command B8h).

10.1.2 Set Column Address (15h)

This triple byte command specifies column start address and end address of the display data RAM. This command also sets the column address pointer to column start address. This pointer is used to define the current read/write column address in graphic display data RAM. If horizontal address increment mode is enabled by command A0h, after finishing read/write one column data, it is incremented automatically to the next column address. Whenever the column address pointer finishes accessing the end column address, it is reset back to start column address and the row address is incremented to the next row.

10.1.3 Write RAM Command (5Ch)

After entering this single byte command, data entries will be written into the display RAM until another command is written. Address pointer is increased accordingly. This command must be sent before write data into RAM.

10.1.4 Read RAM Command (5Dh)

After entering this single byte command, data is read from display RAM until another command is written. Address pointer is increased accordingly. This command must be sent before read data from RAM.

10.1.5 Set Row Address (75h)

This triple byte command specifies row start address and end address of the display data RAM. This command also sets the row address pointer to row start address. This pointer is used to define the current read/write row address in graphic display data RAM. If vertical address increment mode is enabled by command A0h, after finishing read/write one row data, it is incremented automatically to the next row address. Whenever the row address pointer finishes accessing the end row address, it is reset back to start row address.

The diagram below shows the way of column and row address pointer movement through the example: column start address is set to 1 and column end address is set to 118, row start address is set to 2 and row end address is set to 126. Horizontal address increment mode is enabled by command A0h. In this case, the graphic display data RAM column accessible range is from column 1 to column 118 and from row 1 to row 126 only. In addition, the column and row address pointers are set to 1 and 2, respectively. After finishing read/write four pixels of data, the column address is increased automatically by 1 to access the next RAM location for next read/write operation (*solid line in Figure 10-1).* Whenever the column address pointer finishes accessing the end column 118, it is reset back to column 1 and row address is automatically increased by 1 (*solid line in Figure 10-1*). While the end row 126 and end column 118 RAM location is accessed, the row address is reset back to 2 and the column address is reset back to 1 (*dotted line in Figure 10-1*).

Figure 10-110-2 : Example of Column and Row Address Pointer Movement (Gray Scale Mode)

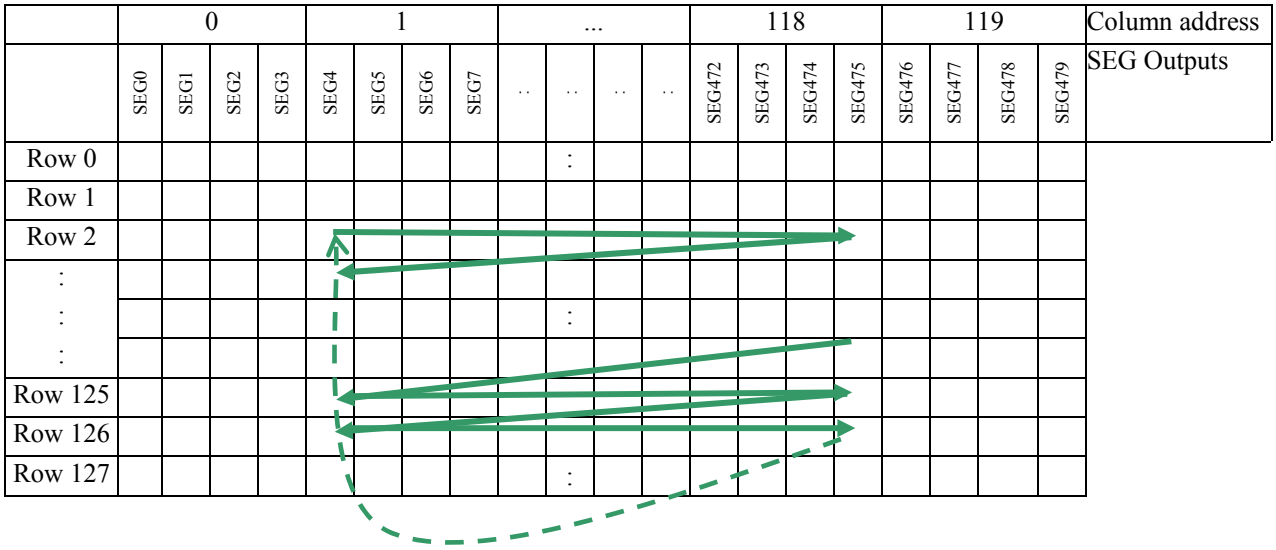

10.1.6 Set Re-map & Dual COM Line Mode (A0h)

This command has multiple configurations and each bit setting is described as follows:

- Address increment mode (A[0])
  When A[0] is set to 0, the driver is set as horizontal address increment mode. After the display RAM is read / written, the column address pointer is increased automatically by 1. If the column address pointer reaches column end address, the column address pointer is reset to column start address and row address pointer is increased by 1. The sequence of movement of the row and column address point for horizontal address increment mode is shown in Figure 10-3.

Figure 10-3 : Address Pointer Movement of Horizontal Address Increment Mode

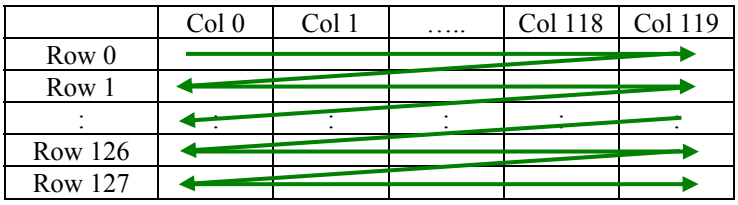

When A[0] is set to 1, the driver is set to vertical address increment mode. After the display RAM is read / written, the row address pointer is increased automatically by 1. If the row address pointer reaches the row end address, the row address pointer is reset to row start address and column address pointer is increased by 1. The sequence of movement of the row and column address point for vertical address increment mode is shown in Figure 10-4.

Figure 10-4: Address Pointer Movement of Vertical Address Increment Mode

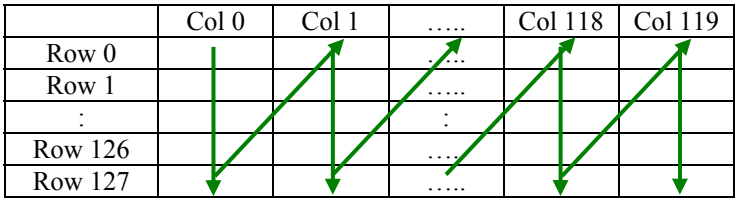

- Column Address Remap (A[1])
  This command bit is made for increasing the layout flexibility of segment signals in OLED module with segment arranged from left to right (when A[1] is set to 0) or vice versa (when A[1] is set to 1), as demonstrated in Figure 10-5.
  A[1] = 0 (reset): RAM Column 0 ~ 119 maps to SEG0-SEG3 ~ SEG476-SEG479
  A[1] = 1: RAM Column 0 ~ 119 maps to SEG476-SEG479 ~ SEG0-SEG3

- Nibble Remap (A[2])
  A[2] = 0 (reset): Data bits direct mapping is performed
  A[2] = 1: The four nibbles of the data bus for RAM access are re-mapped
  The effects are demonstrated in Figure 10-5.

Figure 10-5: GDDRAM in Gray Scale mode with or without Column Address (A[1]) & Nibble remapping (A[2])

Normal, A[1] = 0 & A[2] = 0			SEG0	SEG1	SEG2	SEG3	SEG4	SEG5	SEG6	SEG7	..	..	..	..	SEG472	SEG473	SEG474	SEG475	SEG476	SEG477	SEG478	SEG479	SEG Outputs		
Remap, A[1] = 1 & A[2] = 0			SEG479	SEG478	SEG477	SEG476	SEG475	SEG474	SEG473	SEG472	..	..	..	..	SEG7	SEG6	SEG5	SEG4	SEG3	SEG2	SEG1	SEG0			
Remap, A[1] = 0 & A[2] = 1			SEG3	SEG2	SEG1	SEG0	SEG7	SEG6	SEG5	SEG4	..	..	..	..	SEG475	SEG474	SEG473	SEG472	SEG479	SEG478	SEG477	SEG476			
Normal, A[1] = 1 & A[2] = 1			SEG476	SEG477	SEG478	SEG479	SEG472	SEG473	SEG474	SEG475	..	..	..	..	SEG4	SEG5	SEG6	SEG7	SEG0	SEG1	SEG2	SEG3			
Normal, A[4] = 0	Remap, A[4] = 1		0				1				…				76				77				RAM / Column address (HEX)		
COM0	COM127	0	D1[3:0]	D1[7:4]	D0[3:0]	D0[7:4]	D3[3:0]	D3[7:4]	D2[3:0]	D2[7:4]	..	..	..	..	D237[3:0]	D237[7:4]	D236[3:0]	D236[7:4]	D239[3:0]	D239[7:4]	D238[3:0]	D238[7:4]			
COM1	COM126	1	D241[3:0]	D241[7:4]	D240[3:0]	D240[7:4]	D243[3:0]	D243[7:4]	D242[3:0]	D242[7:4]	..	..	..	..	D477[3:0]	D477[7:4]	D476[3:0]	D476[7:4]	D479[3:0]	D479[7:4]	D478[3:0]	D478[7:4]			
:	:	:																							
COM126	COM1	7E	D30241[3:0]	D30241[7:4]	D30240[3:0]	D30240[7:4]	D30243[3:0]	D30243[7:4]	D30242[3:0]	D30242[7:4]	..	..	..	..	D30477[3:0]	D30477[7:4]	D30476[3:0]	D30476[7:4]	D30479[3:0]	D30479[7:4]	D30478[3:0]	D30478[7:4]			
COM127	COM0	7F	D30481[3:0]	D30481[7:4]	D30480[3:0]	D30480[7:4]	D30483[3:0]	D30483[7:4]	D30482[3:0]	D30482[7:4]	..	..	..	..	D30717[3:0]	D30717[7:4]	D30716[3:0]	D30716[7:4]	D30719[3:0]	D30719[7:4]	D30718[3:0]	D30718[7:4]			
COM Outputs		RAM / Row address (HEX)																							

Corresponding to one pixel

- COM scan direction Remap (A[4])
  This command bit determines the scanning direction of the common for flexible layout of common signals in OLED module either from up to down or vice versa.
  A[1] = 0 (reset): Scan from up to down
  A[1] = 1: Scan from bottom to up
  Details of pin arrangement can be found in Figure 10-5.

- Odd even split of COM pins (A[5])
  This command bit can set the odd even arrangement of COM pins.
  A[5] = 0 (reset): Disable COM split odd even, pin assignment of common is in sequential as
  COM127 COM126...COM 65 COM64...SEG479...SEG0...COM0 COM1...COM62 COM63
  A[5] = 1: Enable COM split odd even, pin assignment of common is in odd even split as
  COM127 COM125...COM3 COM1...SEG479...SEG0...COM0 COM2...COM124 COM126
  Details of pin arrangement can be found in Figure 10-6.

- Set Dual COM mode (B[4])
  This command bit can set the dual COM mode.
  B[4] = 0 (reset): Disable the dual COM mode, as shown on Figure 10-6
  B[4] = 1: Enable the dual COM mode, details of pin arrangement can be found in Figure 10-7
  Notice that Odd even split of COM pins must be disabled (A[5]=0) and MUX must be set equating to or smaller than 63 (MUX≤63) when dual COM mode is enabled (B[4]=1).

Figure 10-6 : COM Pins Hardware Configuration – 1 (MUX ratio: 128)

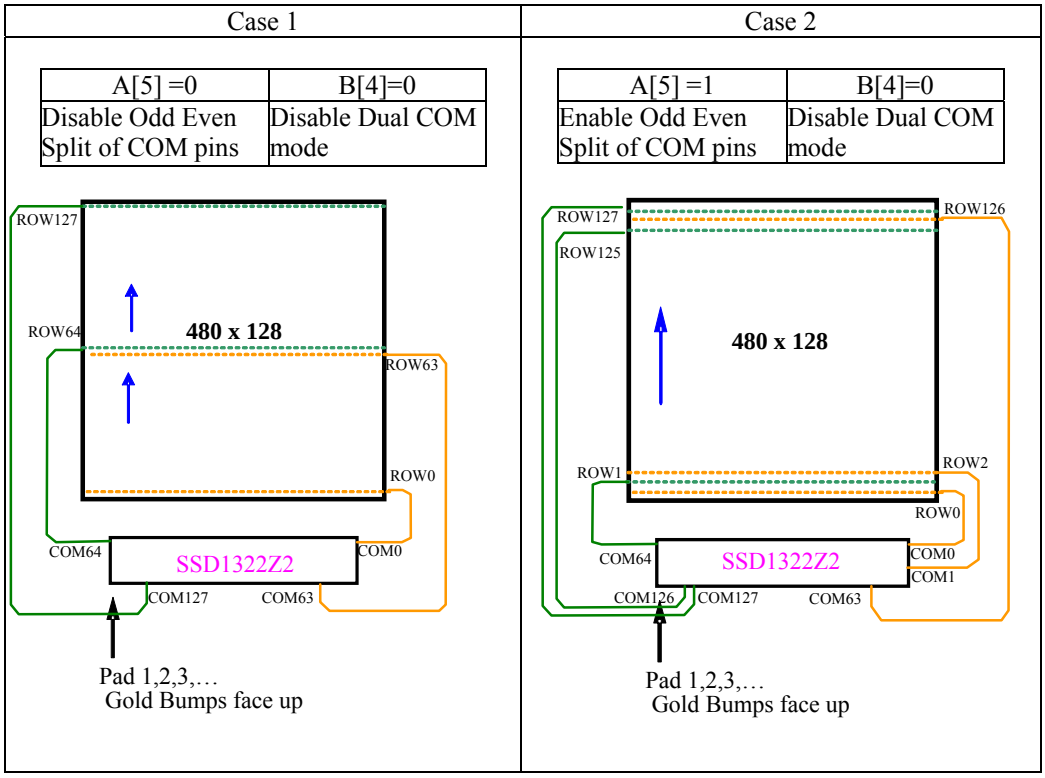

Figure 10-7 : COM Pins Hardware Configuration – 2 (MUX ratio: 64)

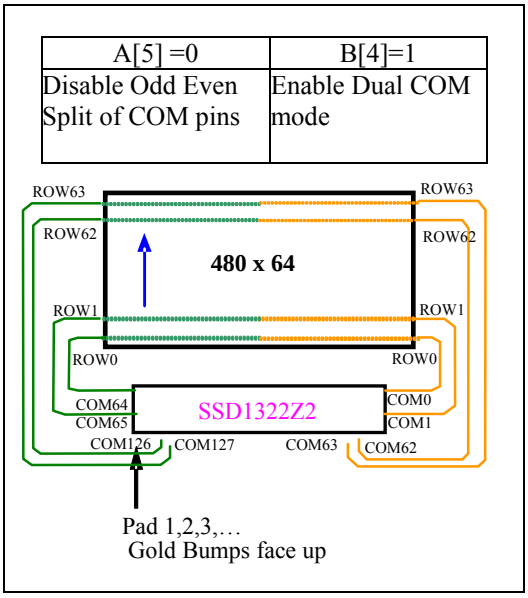

10.1.7 Set Display Start Line (A1h)

This command is used to set Display Start Line register to determine starting address of display RAM to be displayed by selecting a value from 0 to 127. Figure 10-8 shows an example of using this command when MUX ratio = 128 and MUX ratio = 90 and Display Start Line = 40. In there, "Row" means the graphic display data RAM row.

Figure 10-8 : Example of Set Display Start Line with no Remap

	MUX ratio (CAh) = 128	MUX ratio (CAh) = 128	MUX ratio (CAh) = 90	MUX ratio (CAh) = 90
COM Pin	Display Start Line (A1h) = 0	Display Start Line (A1h) = 40	Display Start Line (A1h) = 0	Display Start Line (A1h) = 40
COM0	ROW0	ROW40	ROW0	ROW40
COM1	ROW1	ROW41	ROW1	ROW41
COM2	ROW2	ROW42	ROW2	ROW42
COM3	ROW3	ROW43	ROW3	ROW43
:	:	:	:	:
:	:	:	:	:
COM48	ROW48	ROW88	ROW48	ROW88
COM49	ROW49	ROW89	ROW49	ROW89
COM50	ROW50	ROW90	ROW50	ROW90
COM51	ROW51	ROW91	ROW51	ROW91
:	:	:	:	:
:	:	:	:	:
COM86	ROW86	ROW126	ROW86	ROW126
COM87	ROW87	ROW127	ROW87	ROW127
COM88	ROW88	ROW0	ROW88	ROW0
COM89	ROW89	ROW1	ROW89	ROW1
COM90	ROW90	ROW2	-	-
COM91	ROW91	ROW3	-	-
:	:	:	:	:
:	:	:	:	:
COM124	ROW124	ROW36	-	-
COM125	ROW125	ROW37	-	-
COM126	ROW126	ROW38	-	-
COM127	ROW127	ROW39	-	-
Display Example				

10.1.8 Set Display Offset (A2h)

This command specifies the mapping of display start line (it is assumed that COM0 is the display start line, display start line register equals to 0) to one of COM0-127. For example, to move the COM39 towards the COM0 direction for 40 lines, the 7-bit data in the second command should be given by 0101000. The figure below shows an example of this command. In there, "Row" means the graphic display data RAM row.

Figure 10-9 : Example of Set Display Offset with no Remap

	MUX ratio (CAh) = 128	MUX ratio (CAh) = 128	MUX ratio (CAh) = 90	MUX ratio (CAh) = 90
COM Pin	Display Offset (A2h)=0	Display Offset (A2h)=40	Display Offset (A2h)=0	Display Offset (A2h)=40
COM0	ROW0	ROW40	ROW0	ROW40
COM1	ROW1	ROW41	ROW1	ROW41
COM2	ROW2	ROW42	ROW2	ROW42
COM3	ROW3	ROW43	ROW3	ROW43
:	:	:	:	:
:	:	:	:	:
COM48	ROW48	ROW88	ROW48	ROW88
COM49	ROW49	ROW89	ROW49	ROW89
COM50	ROW50	ROW90	ROW50	-
COM51	ROW51	ROW91	ROW51	-
:	:	:	:	:
:	:	:	:	:
COM86	ROW86	ROW126	ROW86	-
COM87	ROW87	ROW127	ROW87	-
COM88	ROW88	ROW0	ROW88	ROW0
COM89	ROW89	ROW1	ROW89	ROW1
COM90	ROW90	ROW2	-	R0W2
COM91	ROW91	ROW3	-	ROW3
:	:	:	:	:
:	:	:	:	:
COM124	ROW124	ROW36	-	ROW36
COM125	ROW125	ROW37	-	ROW37
COM126	ROW126	ROW38	-	ROW38
COM127	ROW127	ROW39	-	ROW39
Display Example				

10.1.9 Set Display Mode (A4h ~ A7h)

These are single byte command and they are used to set Normal Display, Entire Display ON, Entire Display OFF and Inverse Display.

- Normal Display (A4h)
  Reset the above effect and turn the data to ON at the corresponding gray level. Figure 10-10 shows an example of Normal Display.

Figure 10-10 : Example of Normal Display

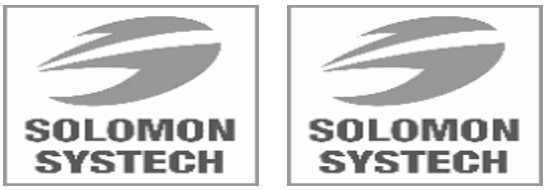

GDDRAM Display

- Set Entire Display ON (A5h)
  Force the entire display to be at gray scale "GS15" regardless of the contents of the display data RAM as shown in Figure 10-11.

Figure 10-11 : Example of Entire Display ON

GDDRAM Display

- Set Entire Display OFF (A6h)
  Force the entire display to be at gray scale level "GS0" regardless of the contents of the display data RAM as shown in Figure.

Figure 10-12 : Example of Entire Display OFF

GDDRAM Display

- Inverse Display (A7h)
  The gray level of display data are swapped such that "GS0" ↔ "GS15", "GS1" ↔ "GS14", …
  Figure 10-13 shows an example of inverse display.

Figure 10-13 : Example of Inverse Display

GDDRAM Display

10.1.10 Enable Partial Display (A8h)

The partial mode display area is defined this triple byte command. Figure 10-14 shows an example of enabling the partial mode display with start row address A[6:0] = 20h and end start row address B[6:0] = 5Fh at MUX ratio = 128.

Figure 10-14 : Example of Partial Mode Display

GDDRAM Display

10.1.11 Exit Partial Display (A9h)

This single byte command is sent to exit the partial mode display area (command A8h).

10.1.12 Set Function selection (ABh)

This double byte command is used to enable or disable the V_{DD} regulator.
Internal V_{DD} regulator is selected when the bit A[0] is set to 1b, while external V_{DD} is selected when A[0] is set to 0b.

10.1.13 Set Display ON/OFF (AEh / AFh)

These single byte commands are used to turn the OLED panel display ON or OFF.
When the display is ON (command AFh), the selected circuits by Set Master Configuration command will be turned ON. When the display is OFF (command AEh), those circuits will be turned off, the segment is in V_{SS} state and common is in high impedance state.

10.1.14 Set Phase Length (B1h)

This double byte command sets the length of phase 1 and 2 of segment waveform of the driver.

- Phase 1 (A[3:0]): Set the period from 5 to 31 in the unit of 2 DCLKs. A larger capacitance of the OLED pixel may require longer period to discharge the previous data charge completely.
- Phase 2 (A[7:4]): Set the period from 3 to 15 in the unit of DCLKs. A longer period is needed to charge up a larger capacitance of the OLED pixel to the target voltage V_P.

10.1.15 Set Front Clock Divider / Oscillator Frequency (B3h)

This double byte command consists of two functions:

- Front Clock Divide Ratio (A[3:0])
  Set the divide ratio to generate DCLK (Display Clock) from CLK. The divide ratio is from 1 to 16, with reset value = 1. Please refer to Section 8.5 for the detail relationship of DCLK and CLK.

- Oscillator Frequency (A[7:4])
  Program the oscillator frequency Fosc which is the source of CLK if CLS pin is pulled HIGH. The 4-bit value results in 16 different frequency settings being available.

10.1.16 Display Enhancement A (B4h)

This triple byte command is sent to enhance the display performance.
Setting A[1:0] to 00b enables the external VSL, while the low GS display quality would be improved by setting B[7:3] to 11111b.

10.1.17 Set GPIO (B5h)

This double byte command is used to set the states of GPIO0 and GPIO1 pins. Refer to Table 9-1 for details.

10.1.18 Set Second Pre-charge period (B6h)

This double byte command is used to set the phase 3 second pre-charge period. The period of phase 3 can be programmed by command B6h and it is ranged from 0 to 15 DCLK's. Please refer to Table 9-1 for the detail information.

10.1.19 Set Gray Scale Table (B8h)

This command is used to set each individual gray scale level for the display. Except gray scale levels GS0 that has no pre-charge and current drive, each gray scale level is programmed in the length of current drive stage pulse width with unit of DCLK. The longer the length of the pulse width, the brighter the OLED pixel when it's turned ON. Following the command B8h, the user has to set the gray scale setting for GS1, GS2, …, GS14, GS15 one by one in sequence. Refer to Section 8.8 for details.

The setting of gray scale table entry can perform gamma correction on OLED panel display. Since the perception of the brightness scale shall match the image data value in display data RAM, appropriate gray scale table setting like the example shown below (Figure 10-15) can compensate this effect.

Figure 10-15 : Example of Gamma correction by Gamma Look Up table setting

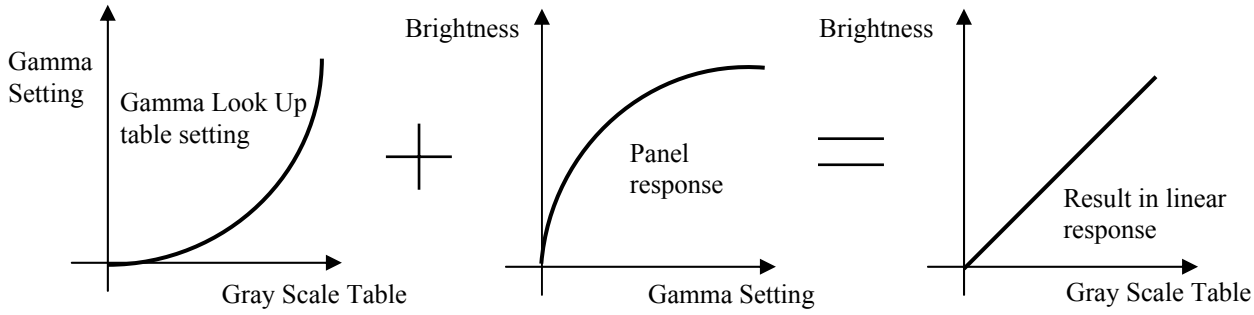

10.1.20 Select Default Linear Gray Scale Table (B9h)

This single byte command reloads the preset linear Gray Scale table as GS0 =Gamma Setting 0, GS1 = Gamma Setting 0, GS2 = Gamma Setting 2, ... GS14 = Gamma Setting 104, GS14 = Gamma Setting 112. Refer to Section 8.8 for details.

10.1.21 Set Pre-charge voltage (BBh)

This double byte command sets the first pre-charge voltage (phase 2) level of segment pins. The level of pre-charge voltage is programmed with reference to V_{CC}. Refer to Table 9-1 for details.

10.1.22 Set V_{COMH} Voltage (BEh)

This double byte command sets the high voltage level of common pins, V_{COMH}. The level of V_{COMH} is programmed with reference to V_{CC}. Refer to Table 9-1 for details.

10.1.23 Set Contrast Current (C1h)

This double byte command is used to set Contrast Setting of the display. The chip has 256 contrast steps from 00h to FFh. The segment output current I_{SEG} increases linearly with the contrast step, which results in brighter display.

10.1.24 Master Current Control (C7h)

This double byte command is to control the segment output current by a scaling factor. The chip has 16 master control steps, with the factor ranges from 1 [0000b] to 16 [1111b – default]. The smaller the master current value, the dimmer the OLED panel display is set.
For example, if original segment output current is 160uA at scale factor = 16, setting scale factor to 8 would reduce the current to 80uA.

10.1.25 Set Multiplex Ratio (CAh)

This double byte command switches default 1:128 multiplex mode to any multiplex mode from 16 to 128. For example, when multiplex ratio is set to 16, only 16 common pins are enabled. The starting and the ending of the enabled common pins are depended on the setting of "Display Offset" register programmed by command A2h. Figure 10-8 and Figure 10-9 show examples of setting the multiplex ratio through command CAh.

10.1.26 Display Enhancement B (D1h)

This triple byte command is sent to enhance the display performance.
User is recommended to set A[5:4] to 00b.

10.1.27 Set Command Lock (FDh)

This command is used to lock the OLED driver IC from accepting any command except itself. After entering FDh 16h (A[2]=1b), the OLED driver IC will not respond to any newly-entered command (except FDh 12h A[2]=0b) and there will be no memory access. This is call "Lock" state. That means the OLED driver IC ignore all the commands (except FDh 12h A[2]=0b) during the "Lock" state.

Entering FDh 12h (A[2]=0b) can unlock the OLED driver IC. That means the driver IC resume from the "Lock" state. And the driver IC will then respond to the command and memory access.

11 MAXIMUM RATINGS

Table 11-1 : Maximum Ratings

(Voltage Reference to V_{SS})

Symbol	Parameter	Value	Unit
V_{DD}	Supply Voltage	-0.5 to 2.75	V
V_{CC}		-0.5 to 21.0	V
V_{DDIO}		-0.5 to V_{CI}	V
V_{CI}		-0.3 to 4.0	V
V_{SEG}	SEG output voltage	0 to V_{CC}	V
V_{COM}	COM output voltage	0 to 0.9*V_{CC}	V
V_{in}	Input voltage	Vss-0.3 to V_{DDIO}+0.3	V
T_A	Operating Temperature	-40 to +85	ºC
T_{stg}	Storage Temperature Range	-65 to +150	ºC

*Maximum Ratings are those values beyond which damage to the device may occur. Functional operation should be restricted to the limits in the Electrical Characteristics tables or Pin Description.

*This device may be light sensitive. Caution should be taken to avoid exposure of this device to any light source during normal operation. This device is not radiation protected.

12 DC CHARACTERISTICS

Conditions (Unless otherwise specified):

Voltage referenced to V_{SS}
V_{DD} = 2.4 to 2.6V
V_{CI} = 2.4 to 3.5V (V_{CI} must be larger than or equal to V_{DD})
T_A = 25°C

Table 12-1 : DC Characteristics

Symbol	Parameter	Test Condition		Min.	Typ.	Max.	Unit
V_{CC}	Operating Voltage	-		10	-	20	V
V_{DD}	Logic Supply Voltage	-		2.4	-	2.6	V
V_{CI}	Low voltage power supply	-		2.4	-	3.5	V
V_{DDIO}	Power Supply for I/O pins	-		1.65	-	V_{CI}	V
V_{OH}	High Logic Output Level	Iout = 100uA		0.9*V_{DDIO}	-	V_{DDIO}	V
V_{OL}	Low Logic Output Level	Iout = 100uA		0	-	0.1*V_{DDIO}	V
V_{IH}	High Logic Input Level	-		0.8*V_{DDIO}	-	V_{DDIO}	V
V_{IL}	Low Logic Input Level	-		0	-	0.2*V_{DDIO}	V
I_{SLP_VDD}	V_{DD} Sleep mode Current	V_{CI} = V_{DDIO} =2.8V, V_{CC} =OFF V_{DD}(external) = 2.5V, Display OFF, No panel attached		-	-	10	uA
I_{SLP_VDDIO}	V_{DDIO} Sleep mode Current	V_{CI} = V_{DDIO} =2.8V, V_{CC} =OFF Display OFF, No panel attached	External V_{DD} = 2.5V	-	-	10	uA
			Internal V_{DD}	-	-	10	uA
I_{SLP_VCI}	V_{CI} Sleep mode Current	V_{CI} = V_{DDIO} =2.8V, V_{CC} =OFF Display OFF, No panel attached	External V_{DD} = 2.5V	-	-	10	uA
			Enable Internal V_{DD} during Sleep mode	-	-	50	uA
			Disable Internal V_{DD} during Sleep mode	-	-	10	uA
I_{DD}	V_{DD} Supply Current	V_{CI} = 2.8V, V_{CC} = 18V, V_{DDIO} = 2.8V, External V_{DD} = 2.5V, Display ON, No panel attached, contrast = FF		-	100	130	uA
I_{DDIO}	V_{DDIO} Supply Current	V_{CI} = 2.8V, V_{CC} = 18V, V_{DDIO} = 2.8V, Display ON, No panel attached, contrast = FF	External V_{DD} = 2.5V	-	40	50	uA
			Internal V_{DD} = 2.5V	-	40	50	uA
I_{CI}	V_{CI} Supply Current	V_{CI} = 2.8V, V_{CC} = 18V, V_{DDIO} = 2.8V, Display ON, No panel attached, contrast = FF	External V_{DD} = 2.5V	-	35	45	uA
			Internal V_{DD} = 2.5V	-	170	220	uA
I_{CC}	V_{CC} Supply Current	V_{CI} = 2.8V, V_{CC} = 18V, V_{DDIO} = 2.8V, Display ON, No panel attached, contrast = FF	External V_{DD} = 2.5V	-	2.2	2.6	mA
			Internal V_{DD} = 2.5V	-	2.2	2.6	mA
I_{SEG}	Segment Output Current Setting V_{CC}=20V, I_{REF}=10uA	Contrast = FF		310	340	370	uA
		Contrast = 7F		-	170	-	uA
		Contrast = 3F		-	85	-	uA
Dev	Segment output current uniformity	Dev = (I_{SEG} – I_{MID}) / I_{MID} I_{MID} = (I_{MAX} + I_{MIN}) / 2 I_{SEG} = Segment current at contrast FF		-3	-	3	%
Adj. Dev	Adjacent pin output current uniformity (contrast = FF)	Adj Dev = (I[n]-I[n+1]) / (I[n]+I[n+1])		-2	-	2	%

13 AC CHARACTERISTICS

Conditions:

Voltage referenced to V_{SS}
V_{DD} = 2.4 to2.6V
V_{CI} = 2.4 to 3.5V (V_{CI} must be larger than or equal to V_{DD})
T_A = 25°C

Table 13-1 : AC Characteristics

Symbol	Parameter	Test Condition	Min.	Typ.	Max.	Unit
F_{OSC} (1)	Oscillation Frequency of Display Timing Generator	V_{CI} = 2.8V	1.75	1.94	2.13	MHz
F_{FRM}	Frame Frequency for 128 MUX Mode	480x128 Graphic Display Mode, Display ON, Internal Oscillator Enabled	-	F_{OSC} * 1 / (D * K * 128)(2)	-	Hz
t_{RES}	Reset low pulse width (RES#)	-	3	-	-	us

Note

(1) F_{OSC} stands for the frequency value of the internal oscillator and the value is measured when command B3h A[7:4] is in default value.

(2) D: divide ratio
K: Phase 1 period + Phase 2 period + X
X: DCLKs in current drive period.
Default K is 9 + 7 + 122 = 138

Table 13-2 : 6800-Series MCU Parallel Interface Timing Characteristics

(V_{DD} - V_{SS} = 2.4 to 2.6V, V_{DDIO}=1.6V, V_{CI} = 3.3V, T_A = 25°C)

Symbol	Parameter	Min	Typ	Max	Unit
t_{cycle}	Clock Cycle Time	300	-	-	ns
t_{AS}	Address Setup Time	10	-	-	ns
t_{AH}	Address Hold Time	0	-	-	ns
t_{DSW}	Write Data Setup Time	40	-	-	ns
t_{DHW}	Write Data Hold Time	7	-	-	ns
t_{DHR}	Read Data Hold Time	20	-	-	ns
t_{OH}	Output Disable Time	-	-	70	ns
t_{ACC}	Access Time	-	-	140	ns
PW_{CSL}	Chip Select Low Pulse Width (read) Chip Select Low Pulse Width (write)	120 60	-	-	ns
PW_{CSH}	Chip Select High Pulse Width (read) Chip Select High Pulse Width (write)	60 60	-	-	ns
t_R	Rise Time	-	-	15	ns
t_F	Fall Time	-	-	15	ns

Figure 13-1 : 6800-series MCU parallel interface characteristics

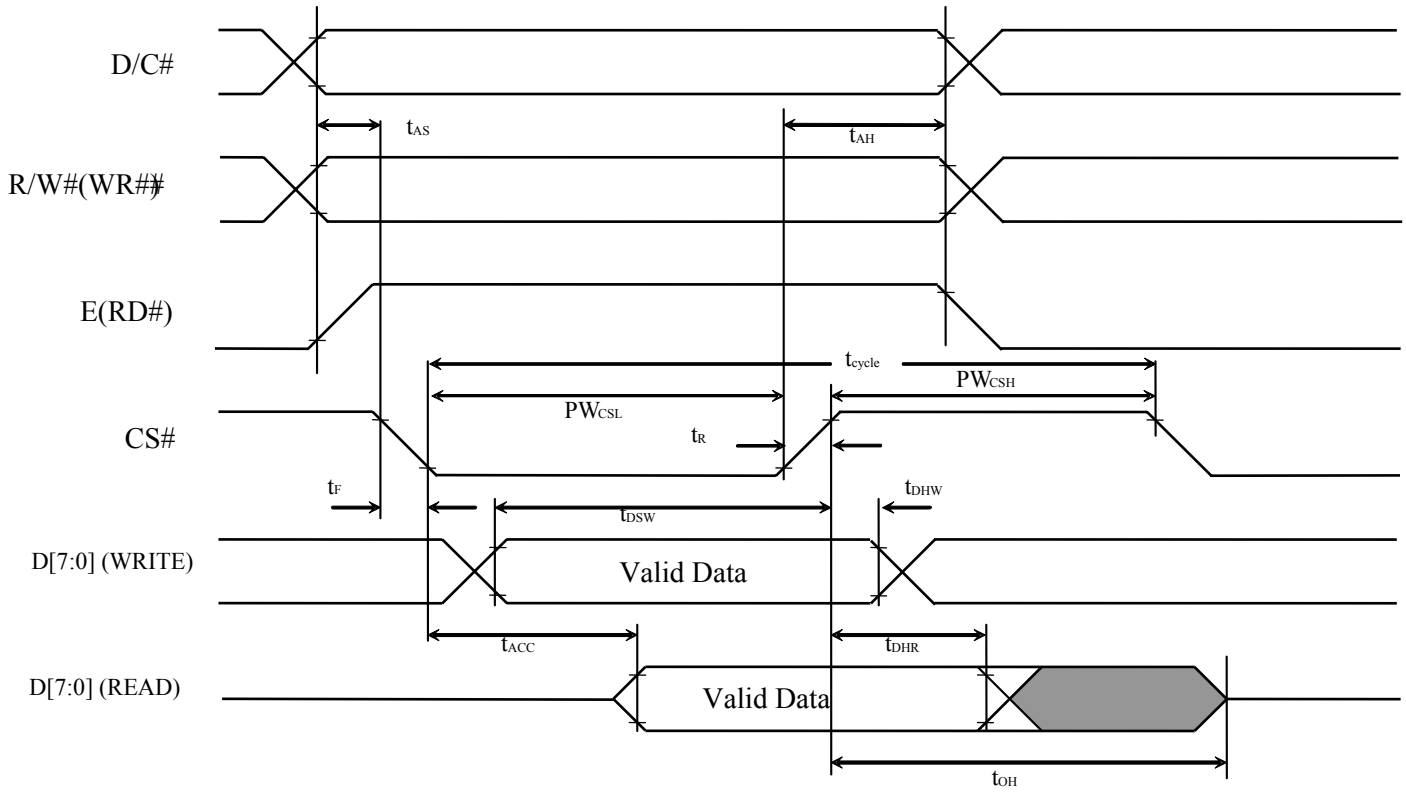

Table 13-3 : 8080-Series MCU Parallel Interface Timing Characteristics

(V_{DD} - V_{SS} = 2.4 to 2.6V, V_{DDIO}=1.6V, V_{CI} = 3.3V, T_A = 25°C)

Symbol	Parameter	Min	Typ	Max	Unit
t_{cycle}	Clock Cycle Time	300	-	-	ns
t_{AS}	Address Setup Time	10	-	-	ns
t_{AH}	Address Hold Time	0	-	-	ns
t_{DSW}	Write Data Setup Time	40	-	-	ns
t_{DHW}	Write Data Hold Time	7	-	-	ns
t_{DHR}	Read Data Hold Time	20	-	-	ns
t_{OH}	Output Disable Time	-	-	70	ns
t_{ACC}	Access Time	-	-	140	ns
t_{PWLR}	Read Low Time	150	-	-	ns
t_{PWLW}	Write Low Time	60	-	-	ns
t_{PWHR}	Read High Time	60	-	-	ns
t_{PWHW}	Write High Time	60	-	-	ns
t_R	Rise Time	-	-	15	ns
t_F	Fall Time	-	-	15	ns
t_{CS}	Chip select setup time	0	-	-	ns
t_{CSH}	Chip select hold time to read signal	0	-	-	ns
t_{CSF}	Chip select hold time	20	-	-	ns

Figure 13-2 : 8080-series MCU parallel interface characteristics

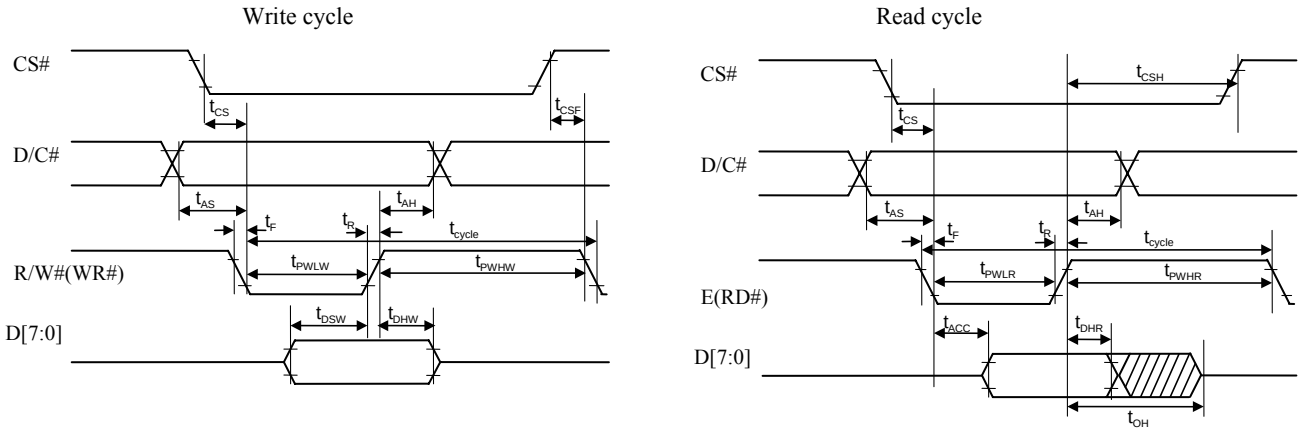

Table 13-4 : Serial Interface Timing Characteristics (4-wire SPI)

(V_{DD} - V_{SS} = 2.4 to 2.6V, V_{DDIO}=1.6V, V_{CI} = 3.3V, T_A = 25°C)

Symbol	Parameter	Min	Typ	Max	Unit
t_{cycle}	Clock Cycle Time	100	-	-	ns
t_{AS}	Address Setup Time	15	-	-	ns
t_{AH}	Address Hold Time	15	-	-	ns
t_{CSS}	Chip Select Setup Time	20	-	-	ns
t_{CSH}	Chip Select Hold Time	10	-	-	ns
t_{DSW}	Write Data Setup Time	15	-	-	ns
t_{DHW}	Write Data Hold Time	15	-	-	ns
t_{CLKL}	Clock Low Time	20	-	-	ns
t_{CLKH}	Clock High Time	20	-	-	ns
t_R	Rise Time	-	-	15	ns
t_F	Fall Time	-	-	15	ns

Figure 13-3 : Serial interface characteristics (4-wire SPI)

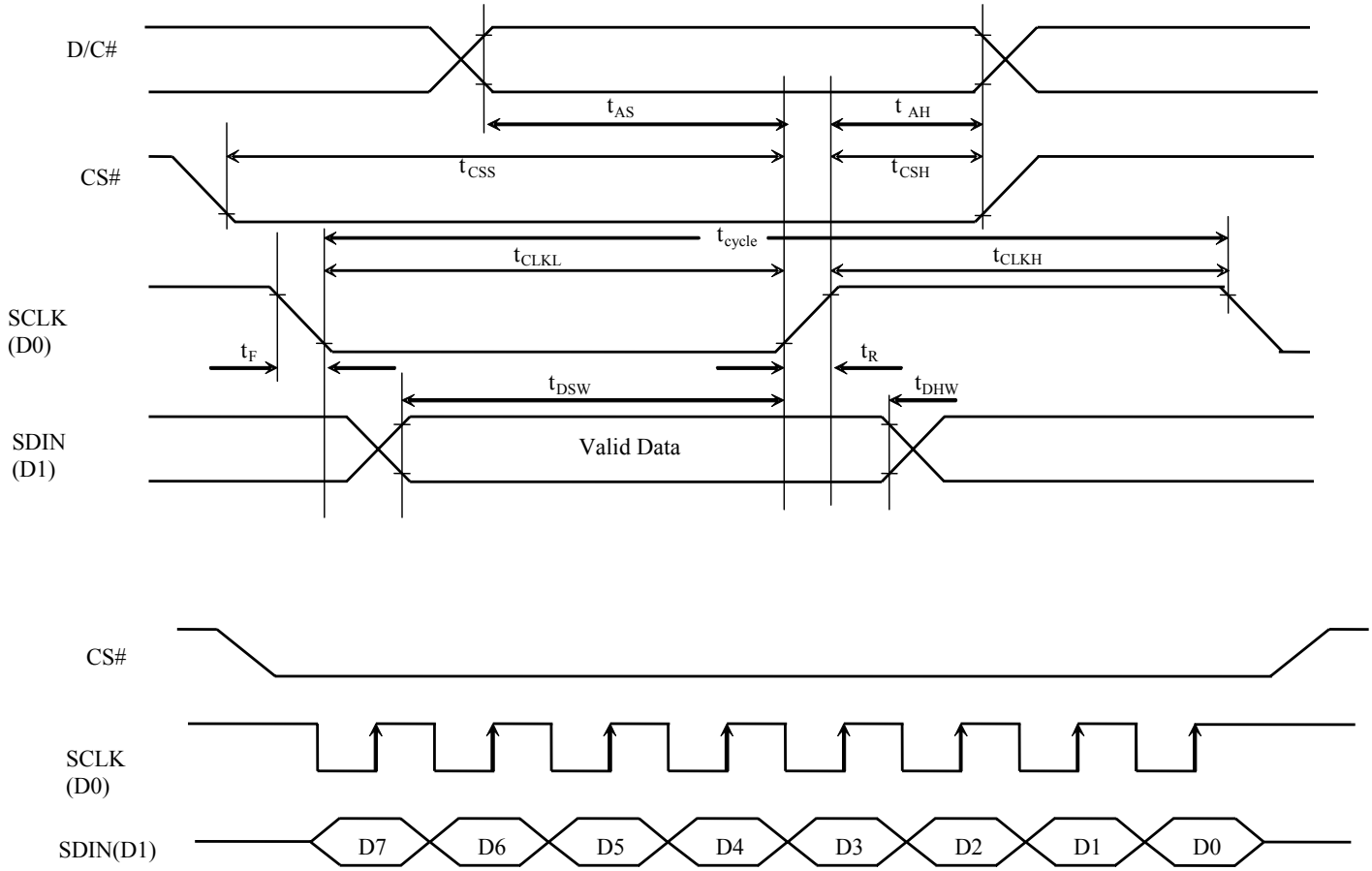

Table 13-5: Serial Interface Timing Characteristics (3-wire SPI)

(V_{DD} - V_{SS} = 2.4 to 2.6V, V_{DDIO}=1.6V, V_{CI} = 3.3V, T_A = 25°C)

Symbol	Parameter	Min	Typ	Max	Unit
t_{cycle}	Clock Cycle Time	100	-	-	ns
t_{CSS}	Chip Select Setup Time	20	-	-	ns
t_{CSH}	Chip Select Hold Time	10	-	-	ns
t_{DSW}	Write Data Setup Time	15	-	-	ns
t_{DHW}	Write Data Hold Time	15	-	-	ns
t_{CLKL}	Clock Low Time	20	-	-	ns
t_{CLKH}	Clock High Time	20	-	-	ns
t_R	Rise Time	-	-	15	ns
t_F	Fall Time	-	-	15	ns

Figure 13-4: Serial interface characteristics (3-wire SPI)

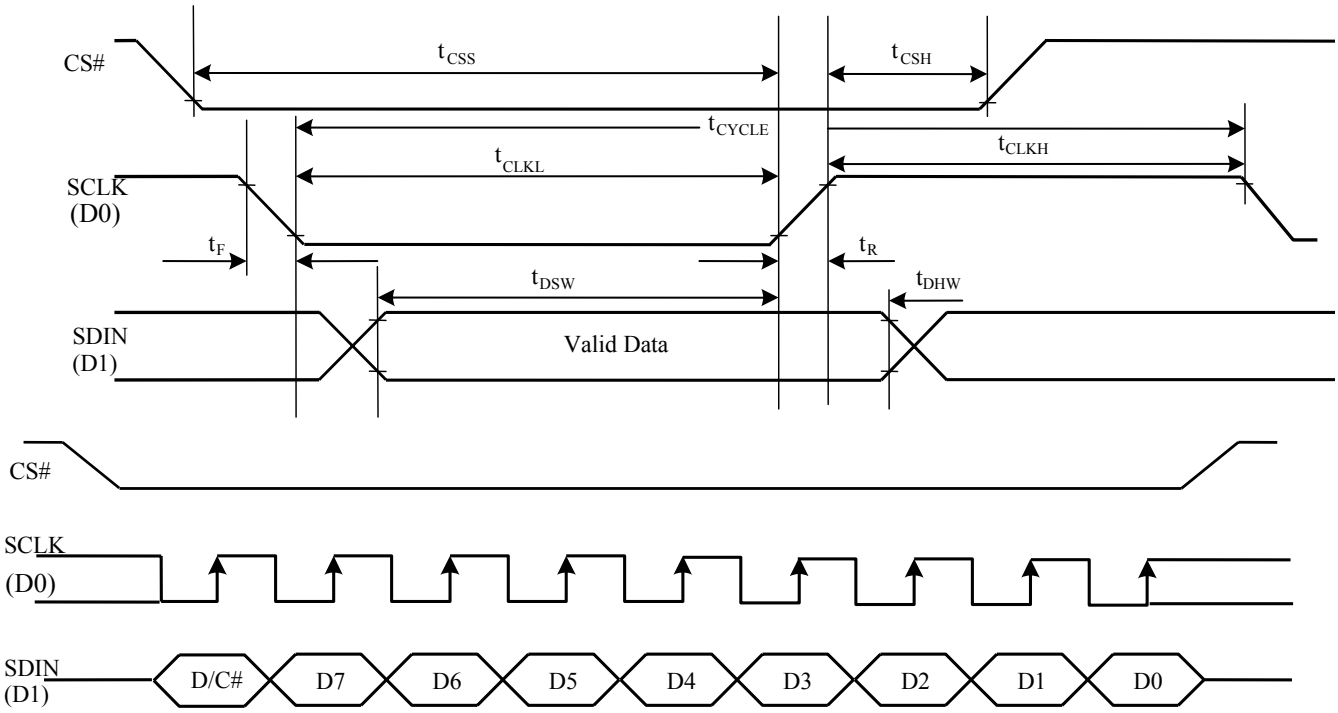

14 APPLICATION EXAMPLES

Figure 14-1 : SSD1322 application example for 8-bit 6800-parallel interface mode (Internal regulated V_{DD})

The configuration for 8-bit 6800-parallel interface mode, externally V_{CC} is shown in the following diagram:
(V_{CI} =3.3V (V_{CI} must be > 2.6V), Internal regulated V_{DD} = 2.5V, V_{DDIO} =1.8V, external V_{CC} = 18V, I_{REF} = 10uA)

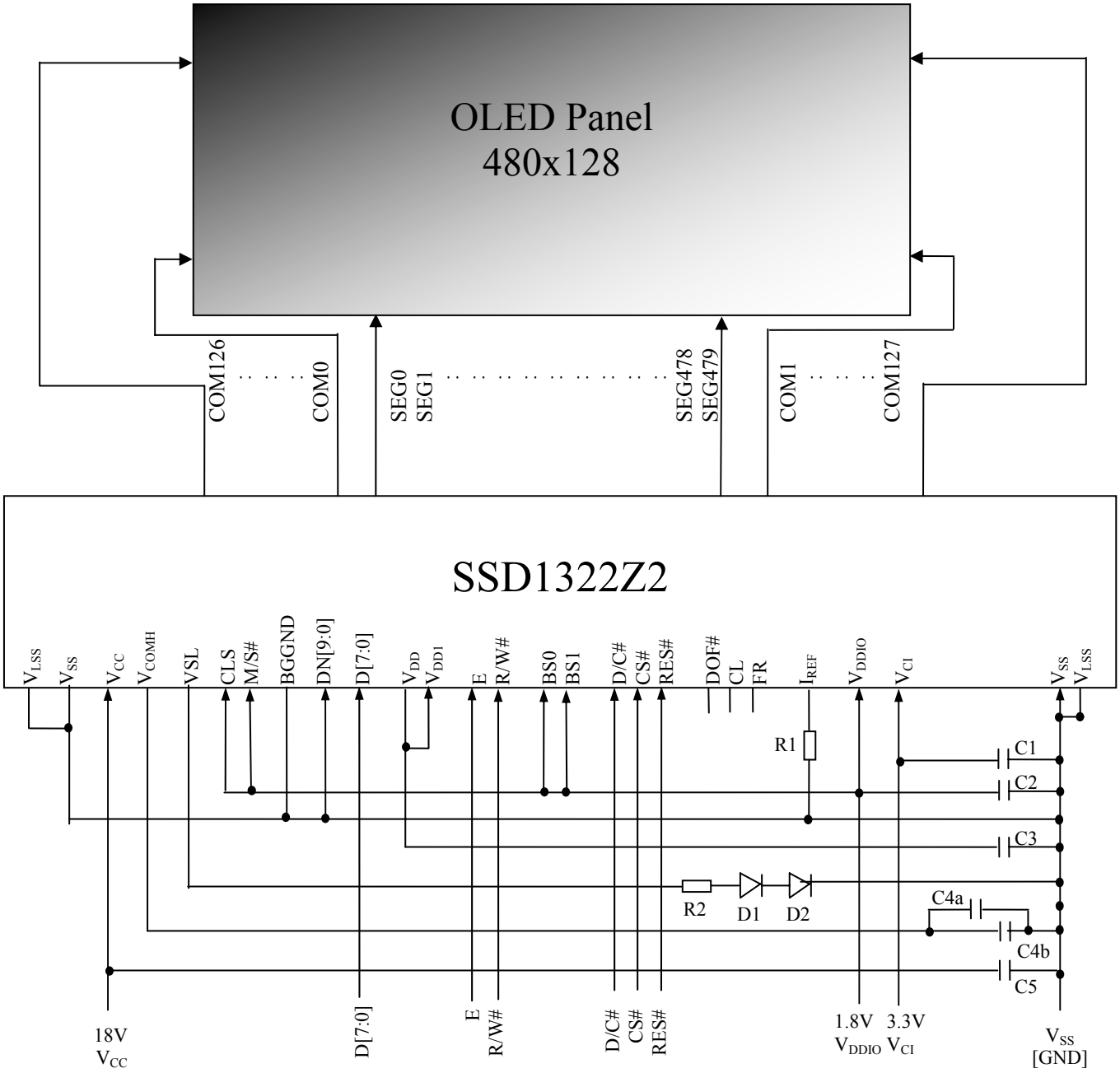

Voltage at I_{REF} = V_{CC} – 6V. For V_{CC} = 18V, I_{REF} = 10uA:
R1 = (Voltage at I_{REF} - V_{SS}) / I_{REF}
= (18 - 6) / 10u
= 1.2MΩ
R2 = 50Ω, 1/8W [(1)]
D1 - D2 = V_{th} = 0.7V, 1N4148 [(1)]
C1 ~ C3: 1uF, C4a and C5: 4.7uF, C4b: 0.1uF

Note
[(1)] The value is recommended value. Select appropriate value against module application.

Figure 14-2 : SSD1322 application example for 8-bit 6800-parallel interface, dual COM mode (Internal V_{DD})

The configuration for 8-bit 6800-parallel interface mode, externally V_{CC} is shown in the following diagram:
(V_{CI} =3.3V (V_{CI} must be > 2.6V), Internal regulated V_{DD} = 2.5V, V_{DDIO} =1.8V, external V_{CC} = 18V, I_{REF} = 10uA)

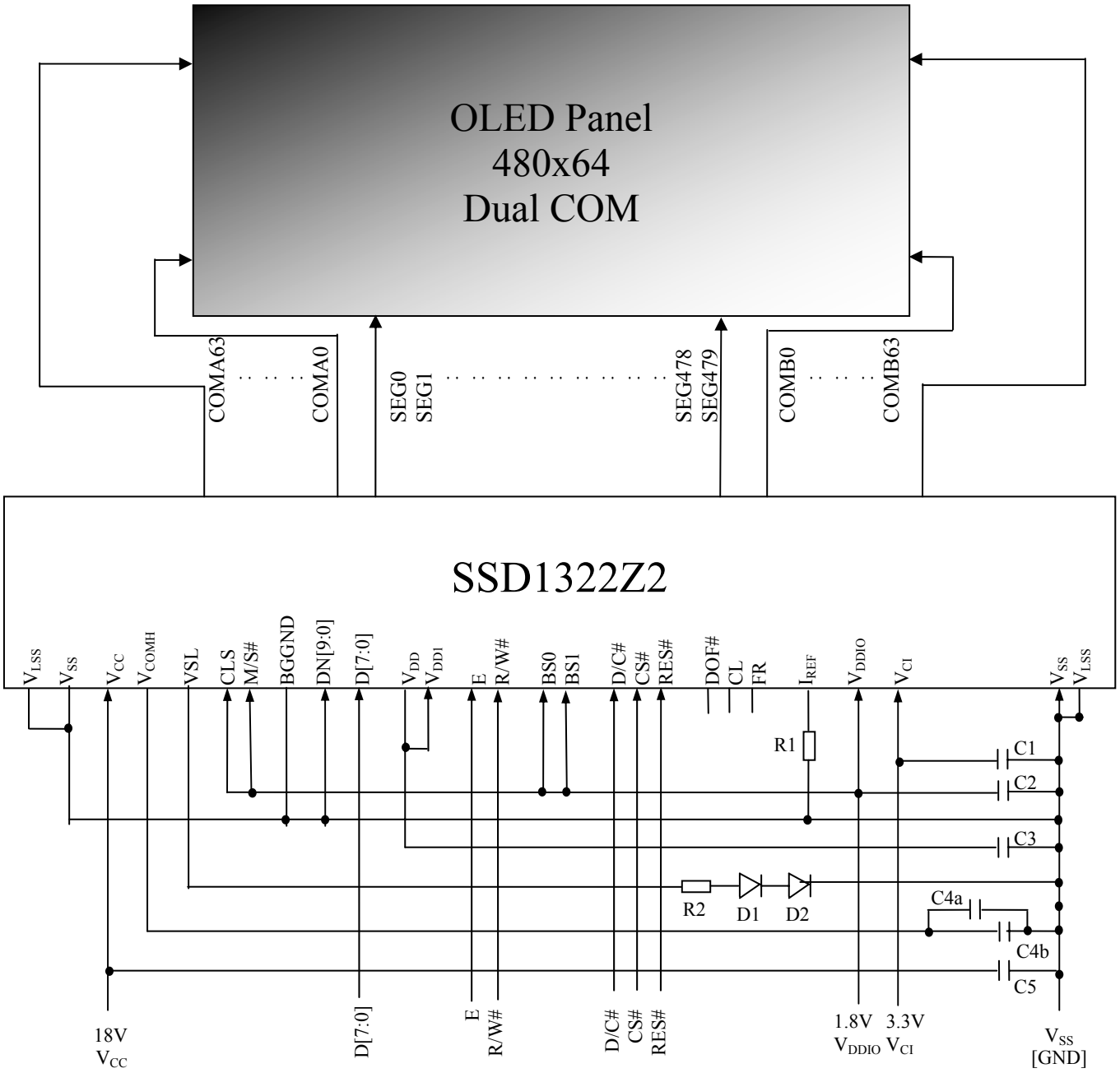

Voltage at I_{REF} = V_{CC} – 6V. For V_{CC} = 18V, I_{REF} = 10uA:
R1 = (Voltage at I_{REF} - V_{SS}) / I_{REF}
= (18 - 6) / 10u
= 1.2MΩ
R2 = 50Ω, 1/8W [(1)]
D1 - D2 = V_{th} = 0.7V, 1N4148 [(1)]
C1 ~ C3: 1uF, C4a and C5: 4.7uF, C4b: 0.1uF

Note
[(1)] The value is recommended value. Select appropriate value against module application.

15 PACKAGE INFORMATION

15.1 SSD1322UR1 detail dimension

Figure 15-1: SSD1322UR1 Detail Dimension

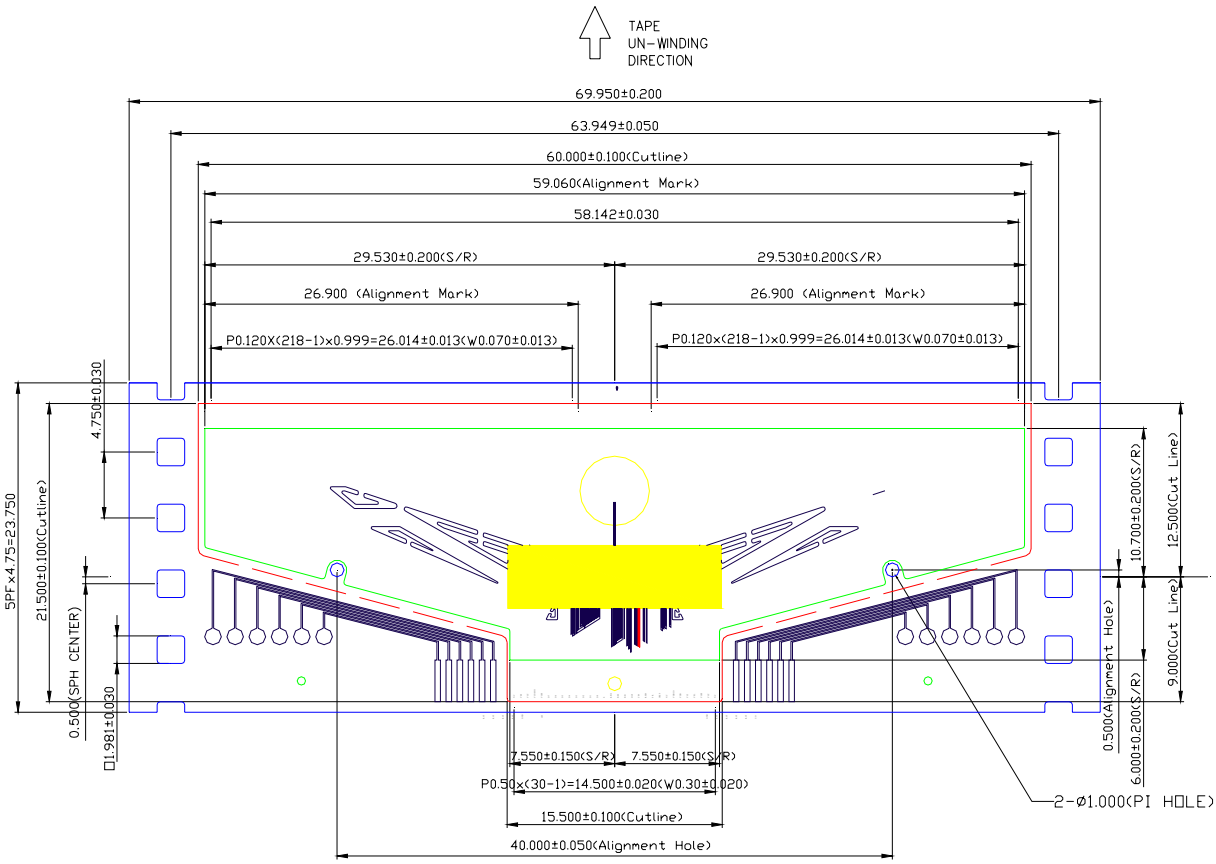

15.2 SSD1322Z2 Die Tray Information

Figure 15-2: SSD1322Z2 Die Tray Drawing

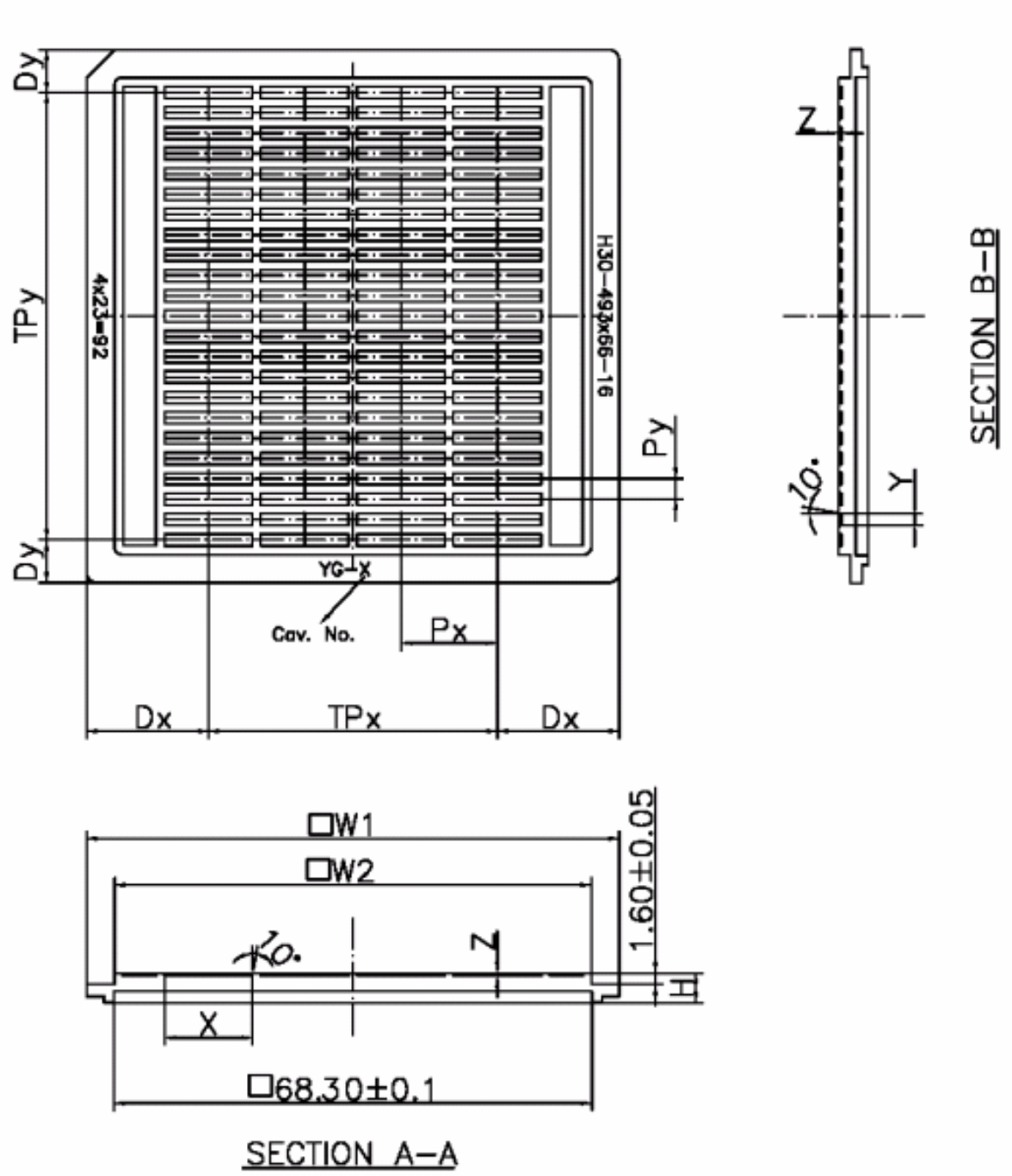

Remark

1. Tray material: ABS
2. Tray color code: Black
3. Surface resistance $10^9 \sim 10^{12}$ Ω
4. Pocket bottom: Rough Surface

Table 15-1: SSD1322Z2 Die Tray Dimensions

Parameter	Dimensions	
	mm	(mil)
W1	76.00±0.10	(2992)
W2	68.00±0.10	(2677)
H	4.20±0.10	(165)
D_X	17.39±0.10	(685)
TP_X	41.22±0.10	(1623)
D_Y	6.10±0.10	(240)
TP_Y	63.80±0.10	(2512)
P_X	13.74±0.05	(541)
P_Y	2.90±0.05	(114)
X	12.52±0.05	(493)
Y	1.68±0.05	(66)
Z	0.40±0.05	(16)
N (number of die)	92 (pocket number)	

Solomon Systech reserves the right to make changes without notice to any products herein. Solomon Systech makes no warranty, representation or guarantee regarding the suitability of its products for any particular purpose, nor does Solomon Systech assume any liability arising out of the application or use of any product or circuit, and specifically disclaims any, and all, liability, including without limitation consequential or incidental damages. “Typical” parameters can and do vary in different applications. All operating parameters, including “Typical” must be validated for each customer application by the customer’s technical experts. Solomon Systech does not convey any license under its patent rights nor the rights of others. Solomon Systech products are not designed, intended, or authorized for use as components in systems intended for surgical implant into the body, or other applications intended to support or sustain life, or for any other application in which the failure of the Solomon Systech product could create a situation where personal injury or death may occur. Should Buyer purchase or use Solomon Systech products for any such unintended or unauthorized application, Buyer shall indemnify and hold Solomon Systech and its offices, employees, subsidiaries, affiliates, and distributors harmless against all claims, costs, damages, and expenses, and reasonable attorney fees arising out of, directly or indirectly, any claim of personal injury or death associated with such unintended or unauthorized use, even if such claim alleges that Solomon Systech was negligent regarding the design or manufacture of the part.

The product(s) listed in this datasheet comply with Directive 2002/95/EC of the European Parliament and of the council of 27 January 2004 on the restriction of the use of certain hazardous substances in electrical and electronic equipment and People’s Republic of China Electronic Industry Standard SJ/T 11363-2006 “Requirements for concentration limits for certain hazardous substances in electronic information products (电子信息产品中有毒有害物质的限量要求)”. Hazardous Substances test report is available upon request.

http://www.solomon-systech.com